COMMISSIONERS COURT

MAY 24 2021

Approved

REQUEST FOR AGENDA PLACEMENT FORM

Submission Deadline - Tuesday, 12:00 PM before Court Dates

SUBMITTED BY: Rexann Knowles **TODAY'S DATE: May 17, 2021**

DEPARTMENT: COUNTY JUDGE

SIGNATURE OF DEPARTMENT HEAD: X_____

REQUESTED AGENDA DATE: **May 24, 2021**

SPECIFIC AGENDA WORDING: Consideration of Contract Documents and Specifications for Waterline Improvement Project, FM 4 & CR 1121, TxCDBG 7218250 to Serve Johnson County on behalf of Johnson County Special Utility District, Johnson County, Texas and Authorization for the County Judge and County Attorney to Sign

PERSON(S) TO PRESENT ITEM: Rexann Knowles

SUPPORT MATERIAL: (Must enclose supporting documentation)

TIME: 2 minutes

(Anticipated number of minutes needed to discuss item)

ACTION ITEM: X
WORKSHOP: _____
CONSENT: _____
EXECUTIVE: _____

STAFF NOTICE:

COUNTY ATTORNEY: XX
AUDITOR: XX
PERSONNEL: _____
BUDGET COORDINATOR: _____
IT DEPARTMENT: _____
PURCHASING DEPARTMENT: _____
PUBLIC WORKS: _____
OTHER: _____

*************This Section to be Completed by County Judge's Office*************

ASSIGNED AGENDA DATE: _____

REQUEST RECEIVED BY COUNTY JUDGE'S OFFICE _____

COURT MEMBER APPROVAL _____ Date_____

CONSTRUCTION CONTRACT

THIS AGREEMENT made this the 24th day of May, 2021, by and between _____ (*a corporation organized and existing under the laws of the State of* Texas) Patterson Professional Services, LLC hereinafter called the "*Contractor*", and Johnson County on behalf of Johnson County Special Utility District hereinafter called the "*County*."

WITNESSETH, that the Contractor and the County for the considerations stated herein mutually agree as follows:

ARTICLE 1. Statement of Work. The Contractor shall furnish all supervision, technical personnel, labor, materials, machinery, tools, equipment and services, including utility and transportation services, and perform and complete all work required for the construction of the Improvements embraced in the Project; namely, waterline improvement for the Johnson County Texas Community Development Block Grant Program 2017/2018 distributed by the Texas department of agriculture project, all in strict accordance with the contract documents including all addenda thereto, numbered N/A, dated N/A and N/A, all as prepared by Daniel & Brown Inc. acting and in these contract documents preparation, referred to as the "*Engineer*".

ARTICLE 2. The Contract Price. The County will pay the Contractor for the performance of the Contract in current funds, for the total quantities of work performed at the *unit prices* stipulated in the Bid for the several respective items of work completed subject to additions and deductions as provided by Standard General Conditions, Part 1, Item 6 hereof.

ARTICLE 3. The Contract. The executed contract documents shall consist of the following components:

a. This Agreement (pgs. 1-3)
b. Addenda
c. Invitation for Bids
d. Instructions to Bidders
e. Signed Copy of Bid
f. General Conditions, Part I
g. Special Conditions
h. Technical Specifications
i. Drawings (*as listed in the Schedule of Drawings*)
j. [Add any applicable documents]

ARTICLE 4. Performance. Work, in accordance with the Contract dated _____, _____, shall commence on or before _____, _____, and Contractor shall complete the WORK within 120 consecutive calendar days thereafter. The date of completion of all WORK is therefore _____, _____.

This Agreement, together with other documents enumerated in this ARTICLE 3, which said other documents are as fully a part of the Contract as if hereto attached or herein repeated, forms the Contract between the parties hereto. In the event that any provision in any component part of this Contract conflicts with any provision of any other component part, the provision of the component part first enumerated in this ARTICLE 3 shall govern, except as otherwise specifically stated.

IN WITNESS WHEREOF, the parties hereto have caused this Agreement to be executed in *triplicate* original copies on the day and year first above written.

_____
(The Contractor)

By Mark Patterson
Title president

Johnson County
(County)

By _____

Title County Judge

Corporate Certifications

I, David Patterson, certify that I am the Secretary of the corporation named as Contractor herein; that Mark Patterson, who signed this Agreement on behalf of the Contractor, was then president of said corporation; that said Agreement was duly signed for and in behalf of said corporation by authority of its governing body, and is within the scope of its corporate powers.

Corporate
Seal

_____
(Corporate Secretary)

EJCDC
ENGINEERS JOINT CONTRACT DOCUMENTS COMMITTEE

NOTICE TO PROCEED

Owner:	**Johnson County on behalf of Johnson County Special Utility District**	Owner's Contract No.:	
Contractor:	**Patterson Professional Services, LLC**	Contractor's Project No.:	
Engineer:	**Daniel & Brown Inc.**	Engineer's Project No.:	**WL-CR1121 FM 4 TxCDBG-0119**
Project:	**Waterline Improvement Project FM 4 & CR 1121-TxCDBG 7218250**	Contract Name:	
		Effective Date of Contract:	

TO CONTRACTOR:

Owner hereby notifies Contractor that the Contract Times under the above Contract will commence to run on May 19, 2021. *[see Paragraph 4.01 of the General Conditions]*

On that date, Contractor shall start performing its obligations under the Contract Documents. No Work shall be done at the Site prior to such date. In accordance with the Agreement, the number of days to achieve Substantial Completion is 120, and the number of days to achieve readiness for final payment is 150.

Before starting any Work at the Site, Contractor must comply with the following:
[Note any access limitations, security procedures, or other restrictions]

Owner: Johnson County on behalf of Johnson County Special Utility District

By: _____
Authorized Signature

Title: County Judge

Date Issued: _____

Copy: Engineer

ATTORNEY'S REVIEW CERTIFICATION

I, the undersigned County Attorney of Johnson County, the duly authorized and acting legal representative of Johnson County, Texas hereby certify as follows:

I have examined the attached construction contract (Waterline Improvement Project, FM 4 & CR 1121, TxCDBG 7218250), payment bond, performance bond and other documents related to the project provided by GrantWorks and based upon the documents provided by GrantWorks am of the opinion that each of the documents may be duly executed by the proper parties, acting through their duly authorized representatives; that said representatives have full power and authority to execute said documents on behalf of the respective parties; and that the documents shall constitute valid and legally binding obligations upon the parties executing the same in accordance with terms, conditions and provisions thereof.

Bill Moore

Date: 5-24-21

Bill Moore
County Attorney, Johnson County
204 S. Buffalo Avenue, Suite 410
Cleburne, Texas 76033
817-556-6330

CONTRACT DOCUMENTS AND SPECIFICATIONS

FOR

WATERLINE IMPROVEMENT PROJECT
FM 4 & CR 1121
TxCDBG 7218250

TO SERVE

JOHNSON COUNTY
on behalf of
JOHNSON COUNTY SPECIAL UTILITY DISTRICT

JOHNSON COUNTY, TEXAS

December 2020

DBI ENGINEERS

DANIEL & BROWN INC.
PO BOX 606 | FARMERSVILLE, TEXAS 75442
972-784-7777 | FIRM REGISTRATION #: F-002225

STATE OF TEXAS
EDDY W. DANIEL
72181
REGISTERED PROFESSIONAL ENGINEER

Eddy W. Daniel PE
12-18-2020

(This page is intentionally left blank)

TABLE OF CONTENTS

(This page is intentionally left blank)

Construction

Sample Advertisement and Invitation for Bids

The Johnson County on behalf of Johnson County Special Utility District will receive bids for a Waterline Improvement Project on FM 4 & CR 1121 until (time) on (day and date) at (address of where bids are to be delivered). The bids will be publicly opened and read aloud at (time) on (day and date) at (address of bid opening location).

Bids are invited for several items and quantities of work as follows:

1. (List a brief description of the items of work and the quantities here.)
2.
3.

Bid/Contract Documents, including Drawings and Technical Specifications are on file at Daniel & Brown Inc., 118 McKinney St., Farmersville, Texas 75442.

Copies of the Bid/Contract Documents may be obtained by depositing $25 for a CD or $50 for printed documents with Daniel & Brown Inc. for each set of documents obtained. The deposit will be refunded if the documents and drawings are returned in good condition within 10 days following the bid opening.

A bid bond in the amount of 5 percent of the bid issued by an acceptable surety shall be submitted with each bid [for those contracts that exceed $100,000]. A certified check or bank draft payable to Johnson County or negotiable U.S. Government Bonds (as par value) may be submitted in lieu of the Bid Bond.

Attention is called to the fact that not less than, the federally determined prevailing (Davis-Bacon and Related Acts) wage rate, as issued by the Texas Department of Agriculture Office of Rural Affairs and contained in the contract documents, must be paid on this project. In addition, the successful bidder must ensure that employees and applicants for employment are not discriminated against because of race, color, religion, sex, sexual identity, gender identity, or national origin.

Johnson County reserves the right to reject any or all bids or to waive any informalities in the bidding.

Bids may be held by Johnson County for a period not to exceed 30 / 60 days from the date of the bid opening for the purpose of reviewing the bids and investigating the bidder's qualifications prior to the contract award.

Johnson County _____ Honorable Roger Harmon, County Judge _____ (date)

All contractors/subcontractors that are debarred, suspended or otherwise excluded from or ineligible for participation on federal assistance programs may not undertake any activity in part or in full under this project.

(This page is intentionally left blank)

INSTRUCTIONS TO BIDDERS FOR CONSTRUCTION

1. Use of Separate Bid Forms

These contract documents include a complete set of bid and contract forms which are for the convenience of the bidders and are not to be detached from the contract document, completed or executed. Separate bid forms are provided for your use.

2. Interpretations or Addenda

No oral interpretations will be made to any bidder. Each request for clarification shall be made in writing to the Grant Recipient or engineer no less than seven (7) days prior to the bid opening. Each interpretation made will be in the form of an Addendum to the contract documents and will be distributed to all parties holding contract documents no less than seven (7) days prior to the bid opening. It is, however, the bidder's responsibility to make inquiry as to any addenda issued. All such addenda shall become part of the contract documents and all bidders shall be bound by such addenda, whether or not received by the bidders.

If an addendum to the bid package is necessary, it must be distributed to each potential bidder. The distribution of an addendum shall be verified either by statements of receipt or registered/certified mail receipts, which shall be included in the public works construction file. The addendum shall allow adequate time for consideration in bid preparation (usually at least one week). If adequate time is not available, the bid opening date must be extended and the Grant Recipient must republish the invitation for bids containing the place, time, and date for the new bid opening. Note that any change to the original bid opening date will require republication of the invitation for bids at least once in a locally published newspaper. The republished notice will include the place, time and date for the new bid opening and must be published at least seven days prior to the new bid opening date.

3. Inspection of Site

Each bidder should visit the site of the proposed work and should become acquainted with the existing conditions and facilities, the difficulties and restrictions pertaining to the performance of the contract. The bidder should thoroughly examine and become familiar with the drawings, technical specifications and all other contract documents. The contractor by the execution of the contract shall in no way be relieved of any obligation under it due to failure to receive or examine any form or legal document or to visit the site or the conditions existing at the site. The City/ County will be justified in rejecting any claim based on lack of inspection of the site prior to the bid.

4. Alternate bid items

No alternate bids or bid items will be considered unless they are specifically requested by the technical specifications.

5. Bids

a. All bids must be submitted on the forms provided and are subject to all requirements of the Contract Documents, including the Drawings.

b. All bids must be regular in every respect and no interlineation, excisions or special conditions may be made or included by the bidder.

c. Bid documents, including but not limited to the bid, the bid bond(s), the contractor's certifications, Certification of Bidder Regarding Civil Rights Laws and Regulations, Local Opportunity Plan, Conflict of Interest Questionnaire, Non-collusion Affidavit of Prime Bidder, Certification Regarding Lobbying, and the Statement of the Bidder's Qualifications, shall be sealed in an envelope and clearly labeled with the words "Bid Documents", the project number, name of bidder and the date and time of bid opening.

d. The City / County may consider as irregular any bid on which there is an alteration of or departure from the bid form and, at its option, may reject any irregular bid.

e. If a contract is awarded, it will be awarded to a responsible bidder on the basis of the lowest/best bid and the selected alternate bid items, if any. The contract will require the completion of the work in accordance with the contract documents.

6. Bid Modifications Prior to Bid Opening

a. Any bidder may modify its bid by submitting a modification or supplemental bid at any time prior to the scheduled closing time for receipt of bids, provided such modification or supplemental bid is received by the locality prior to the closing time. The modification or supplemental bid should not reveal the original bid price but should provide only the addition, subtractions or other modifications to the original bid so that the final prices or terms will not be known by the locality until the sealed bid is open.

7. Bid Bond

a. A bid bond in the amount of 5% of the bid issued by an acceptable surety shall be submitted with each bid [for contracts greater than $100,000]. A certified check or bank draft payable to the locality or negotiable U.S. Government Bonds (as par value) may be submitted in lieu of the Bid Bond.

b. The bid bond or its comparable, will be returned to the bidder as soon as practical after the opening of the bids.

8. Statement of Bidders Qualifications

Each bidder shall submit on the form furnished for that purpose a statement of the bidder's qualifications. The Grant Recipient shall have the right to take such steps as it deems necessary to determine the ability of the bidder to perform its obligations under the contract, and the bidder shall furnish the Grant Recipient all such information and data for this purpose as it may request. The right is reserved to reject any bid where an investigation of the available data does not satisfy the Grant Recipient that the bidder is qualified to carry out properly the terms of the contract.

9. Unit Price

The unit price for each of the several items in the bid shall include its pro rata share of overhead so that the sum of the products obtained by multiplying the quantity shown for each item by the unit price bid represents the total bid. Any bid not conforming to this requirement may be rejected as informal. Special attention is drawn to this condition, as the unit prices will be used to determine the amount of any change orders resulting from an increase or decrease in quantities.

10. Corrections:

Erasures or other corrections in the bid must be noted over the signature of the bidder.

11. Time for Receiving Bids

Bids received prior to the advertised hour of opening shall be kept securely sealed. The officer appointed to open the bids shall decide when the specified time has arrived and no bid received thereafter will be considered; except that when a bid arrives by mail after the time fixed for opening, but before the reading of all other bids is completed, and it is shown to the satisfaction of the Grant Recipient that the late arrival of the bid was solely due to delay in the mail for which the bidder was not responsible, such bid will be received and considered.

12. Opening of Bids

The City/County shall, at the time and place fixed for the opening of bids, open each bid and publicly read it aloud, irrespective of any irregularities therein. Bidders and other interested individuals may be present.

13. Withdrawal of Bids

Bidder may withdraw the bid before the time fixed for the opening of bids, by communicating its purpose in writing to the Grant Recipient. Upon receipt of such notice, the unopened bid will be returned to the bidder. The bid guaranty of any bidder withdrawing his bid will be returned promptly.

14. Award of Contract/Rejection of Bids

a. The contract will be awarded to the responsive, responsible Bidder submitting the lowest/best bid. The bidder selected will be notified at the earliest possible date. The locality reserves the right to reject any or all bids and to waive any informality in bids received where such rejection or waiver is in its interest.

b. The Grant Recipient reserves the right to consider as unqualified to do the work any bidder who does not habitually perform with his own forces the major portions of the work involved in construction of the improvements embraced in this contract.

15. Execution of Agreement/Performance and Payment Bonds

a. Performance Bonds - Requires all prime contractors which enter into a formal contract in excess of $100,000 with the State, a county, or a municipality; a department, board, or agency of the state, a county, or a municipality; and a school district or a subdivision thereof, to obtain a Performance Bond in the amount of the contract before commencing with work

b. Payment Bonds- Requires all prime contractors which enter into a formal contract with the State, a county, or a municipality; a department, board, or agency of the state, a county, or a municipality; and a school district or a subdivision thereof, to furnish to the governmental entity a payment bond in the amount of the contract. The payment bond must be filed within 30 days from the date of the Notice of Award:

- Municipalities: If the contract is in excess of $50,000, a payment bond is required.
- Counties: If the contract is in excess of $25,000, a payment bond is required.

c. The failure of the successful bidder to execute the agreement and supply the required bonds within thirty (30) days from the date of the notice of award-or within such extended period as the locality may grant, shall constitute a default and the locality may, at its option either award the contract to the next lowest responsible bidder, or re-advertise for bids. In either case, the locality may charge against the bidder the difference between the amount of the bid, and the amount for which a contract is subsequently executed irrespective of whether this difference exceeds the amount of the bid bond. If a more favorable bid is received through re-advertisement, the defaulting bidder shall have no claim against the locality for a refund.

16. Wages and Salaries

Attention is particularly called to the requirement of paying not less than the prevailing Davis Bacon Related Acts (DBRA) wage rates specified in the Contract Documents. These rates are minimums to be paid during the life of the contract. It is therefore the responsibility of the Bidder to inform themselves as to local labor conditions.

17. Equal Employment Opportunity

Attention is called to the requirements for ensuring that employees and applicants for employment are not discriminated against because of race, color, religion, sex, sexual identity, gender identity, or national origin, and other civil rights requirements.

18. Certification Regarding Lobbying

Contractors who apply or bid for an award of $100,000 or more shall provide the required certification that it will not and has not used Federal appropriated funds to pay any person or organization for influencing or attempting to influence an officer of employee of any agency, a member of Congress, officer or employee of Congress, or an employee of a member of Congress in connection with obtaining any Federal contract, grant or any other award covered by 31 USC § 1352.

19. Conflicts Disclosure Statement. (Sec. 176.003 in Chapter 176 of the Local Government Code)

a. A local government officer shall file a conflicts disclosure statement with respect to a vendor if:
   1) the vendor enters into a contract with the local governmental entity or the local governmental entity is considering entering into a contract with the vendor; and
   2) the vendor:
      I. has an employment or other business relationship with the local government officer or a family member of the officer that results in the officer or family member receiving taxable income, other than investment income, that exceeds $2,500 during the 12-month period preceding the date that the officer becomes aware that: (i) a contract between the local governmental entity and vendor has been executed; or (ii) the local governmental entity is considering entering into a contract with the vendor;
      II. has given to the local government officer or a family member of the officer one or more gifts that have an aggregate value of more than $100 in the 12-month period preceding the date the officer becomes aware that: (i) a contract between the local governmental entity and vendor has been executed; or (ii) the local governmental entity is considering entering into a contract with the vendor; or has a family relationship with the local government officer.

(a-1). A local government officer is not required to file a conflicts disclosure statement in relation to a gift accepted by the officer or a family member of the officer if the gift is: (1) a political contribution as defined by Title 15, Election Code; or (2) food accepted as a guest.

(a-2). A local government officer is not required to file a conflicts disclosure statement under Subsection (a) if the local governmental entity or vendor described by that subsection is an administrative agency created under Section 791.013, Government Code.

b. A local government officer shall file the conflicts disclosure statement with the records administrator of the local governmental entity not later than 5 p.m. on the seventh business day after the date on which the officer becomes aware of the facts that require the filing of the statement under Subsection (a).

Davis Bacon Wage Rates

(This page is intentionally left blank)

"General Decision Number: TX20210026 01/01/2021

Superseded General Decision Number: TX20200026

State: Texas

Construction Type: Heavy

Counties: Johnson, Parker and Tarrant Counties in Texas.

Heavy Construction Projects (Including Water and Sewer Lines)

Note: Under Executive Order (EO) 13658, an hourly minimum wage of $10.95 for calendar year 2021 applies to all contracts subject to the Davis-Bacon Act for which the contract is awarded (and any solicitation was issued) on or after January 1, 2015. If this contract is covered by the EO, the contractor must pay all workers in any classification listed on this wage determination at least $10.95 per hour (or the applicable wage rate listed on this wage determination, if it is higher) for all hours spent performing on the contract in calendar year 2021. If this contract is covered by the EO and a classification considered necessary for performance of work on the contract does not appear on this wage determination, the contractor must pay workers in that classification at least the wage rate determined through the conformance process set forth in 29 CFR 5.5(a)(1)(ii) (or the EO minimum wage rate, if it is higher than the conformed wage rate). The EO minimum wage rate will be adjusted annually. Please note that this EO applies to the above-mentioned types of contracts entered into by the federal government that are subject to the Davis-Bacon Act itself, but it does not apply to contracts subject only to the Davis-Bacon Related Acts, including those set forth at 29 CFR 5.1(a)(2)-(60). Additional information on contractor requirements and worker protections under the EO is available at www.dol.gov/whd/govcontracts.

Modification Number	Publication Date
0	01/01/2021

* PLUM0146-002 11/01/2020

	Rates	Fringes
PLUMBER/PIPEFITTER	$ 32.93	9.70

SUTX1990-041 06/01/1990

	Rates	Fringes
CARPENTER	$ 10.40	$3.64
Concrete Finisher	$ 9.81	
ELECTRICIAN	$ 13.26	
Form Setter	$ 7.86	
Laborers:		
Common	$ 7.25	

```
     Utility.....................$  8.09

PAINTER.........................$ 10.89

Pipelayer.......................$  8.43

Power equipment operators:
     Backhoe.....................$ 11.89            3.30
     Bulldozer...................$ 10.76
     Crane.......................$ 13.16            3.30
     Front End Loader............$ 10.54
     Mechanic....................$ 10.93
     Scraper.....................$ 10.00

Reinforcing Steel Setter.........$ 10.64

TRUCK DRIVER....................$  7.34
----------------------------------------------------------------

WELDERS - Receive rate prescribed for craft performing
operation to which welding is incidental.

================================================================

Note: Executive Order (EO) 13706, Establishing Paid Sick Leave
for Federal Contractors applies to all contracts subject to the
Davis-Bacon Act for which the contract is awarded (and any
solicitation was issued) on or after January 1, 2017.  If this
contract is covered by the EO, the contractor must provide
employees with 1 hour of paid sick leave for every 30 hours
they work, up to 56 hours of paid sick leave each year.
Employees must be permitted to use paid sick leave for their
own illness, injury or other health-related needs, including
preventive care; to assist a family member (or person who is
like family to the employee) who is ill, injured, or has other
health-related needs, including preventive care; or for reasons
resulting from, or to assist a family member (or person who is
like family to the employee) who is a victim of, domestic
violence, sexual assault, or stalking.  Additional information
on contractor requirements and worker protections under the EO
is available at www.dol.gov/whd/govcontracts.

Unlisted classifications needed for work not included within
the scope of the classifications listed may be added after
award only as provided in the labor standards contract clauses
(29CFR 5.5 (a) (1) (ii)).


----------------------------------------------------------------


The body of each wage determination lists the classification
and wage rates that have been found to be prevailing for the
cited type(s) of construction in the area covered by the wage
determination. The classifications are listed in alphabetical
order of ""identifiers"" that indicate whether the particular
rate is a union rate (current union negotiated rate for local),
a survey rate (weighted average rate) or a union average rate
(weighted union average rate).

Union Rate Identifiers

A four letter classification abbreviation identifier enclosed
in dotted lines beginning with characters other than ""SU"" or
""UAVG"" denotes that the union classification and rate were
```

prevailing for that classification in the survey. Example: PLUM0198-005 07/01/2014. PLUM is an abbreviation identifier of the union which prevailed in the survey for this classification, which in this example would be Plumbers. 0198 indicates the local union number or district council number where applicable, i.e., Plumbers Local 0198. The next number, 005 in the example, is an internal number used in processing the wage determination. 07/01/2014 is the effective date of the most current negotiated rate, which in this example is July 1, 2014.

Union prevailing wage rates are updated to reflect all rate changes in the collective bargaining agreement (CBA) governing this classification and rate.

Survey Rate Identifiers

Classifications listed under the ""SU"" identifier indicate that no one rate prevailed for this classification in the survey and the published rate is derived by computing a weighted average rate based on all the rates reported in the survey for that classification. As this weighted average rate includes all rates reported in the survey, it may include both union and non-union rates. Example: SULA2012-007 5/13/2014. SU indicates the rates are survey rates based on a weighted average calculation of rates and are not majority rates. LA indicates the State of Louisiana. 2012 is the year of survey on which these classifications and rates are based. The next number, 007 in the example, is an internal number used in producing the wage determination. 5/13/2014 indicates the survey completion date for the classifications and rates under that identifier.

Survey wage rates are not updated and remain in effect until a new survey is conducted.

Union Average Rate Identifiers

Classification(s) listed under the UAVG identifier indicate that no single majority rate prevailed for those classifications; however, 100% of the data reported for the classifications was union data. EXAMPLE: UAVG-OH-0010 08/29/2014. UAVG indicates that the rate is a weighted union average rate. OH indicates the state. The next number, 0010 in the example, is an internal number used in producing the wage determination. 08/29/2014 indicates the survey completion date for the classifications and rates under that identifier.

A UAVG rate will be updated once a year, usually in January of each year, to reflect a weighted average of the current negotiated/CBA rate of the union locals from which the rate is based.

WAGE DETERMINATION APPEALS PROCESS

1.) Has there been an initial decision in the matter? This can be:

* an existing published wage determination
* a survey underlying a wage determination
* a Wage and Hour Division letter setting forth a position on a wage determination matter

* a conformance (additional classification and rate) ruling

On survey related matters, initial contact, including requests for summaries of surveys, should be with the Wage and Hour Regional Office for the area in which the survey was conducted because those Regional Offices have responsibility for the Davis-Bacon survey program. If the response from this initial contact is not satisfactory, then the process described in 2.) and 3.) should be followed.

With regard to any other matter not yet ripe for the formal process described here, initial contact should be with the Branch of Construction Wage Determinations. Write to:

Branch of Construction Wage Determinations
Wage and Hour Division
U.S. Department of Labor
200 Constitution Avenue, N.W.
Washington, DC 20210

2.) If the answer to the question in 1.) is yes, then an interested party (those affected by the action) can request review and reconsideration from the Wage and Hour Administrator (See 29 CFR Part 1.8 and 29 CFR Part 7). Write to:

Wage and Hour Administrator
U.S. Department of Labor
200 Constitution Avenue, N.W.
Washington, DC 20210

The request should be accompanied by a full statement of the interested party's position and by any information (wage payment data, project description, area practice material, etc.) that the requestor considers relevant to the issue.

3.) If the decision of the Administrator is not favorable, an interested party may appeal directly to the Administrative Review Board (formerly the Wage Appeals Board). Write to:

Administrative Review Board
U.S. Department of Labor
200 Constitution Avenue, N.W.
Washington, DC 20210

4.) All decisions by the Administrative Review Board are final.

==========

END OF GENERAL DECISION
"

BID FORM

Waterline Improvement Project
FM 4 & CR 1121
Johnson County on behalf of Johnson County Special Utility District
Johnson County, TX

TABLE OF CONTENTS

Page

ARTICLE 1 – BID RECIPIENT

1.01 This Bid is submitted to:

Johnson County on behalf of Johnson County SUD
c/o Daniel & Brown Inc.
118 McKinney St.
Farmersville, TX 75442
972-784-7777

1.02 The undersigned Bidder proposes and agrees, if this Bid is accepted, to enter into an Agreement with Owner in the form included in the Bidding Documents to perform all Work as specified or indicated in the Bidding Documents for the prices and within the times indicated in this Bid and in accordance with the other terms and conditions of the Bidding Documents.

ARTICLE 2 – BIDDER'S ACKNOWLEDGEMENTS

2.01 Bidder accepts all of the terms and conditions of the Instructions to Bidders, including without limitation those dealing with the disposition of Bid security. This Bid will remain subject to acceptance for 60 days after the Bid opening, or for such longer period of time that Bidder may agree to in writing upon request of Owner.

ARTICLE 3 – BIDDER'S REPRESENTATIONS

3.01 In submitting this Bid, Bidder represents that:

A. Bidder has examined and carefully studied the Bidding Documents, and any data and reference items identified in the Bidding Documents, and hereby acknowledges receipt of the following Addenda:

Addendum No.	Addendum, Date
_____	_____
_____	_____
_____	_____
_____	_____

B. Bidder has visited the Site, conducted a thorough, alert visual examination of the Site and adjacent areas, and become familiar with and satisfied itself as to the general, local, and Site conditions that may affect cost, progress, and performance of the Work.

C. Bidder is familiar with and has satisfied itself as to all Laws and Regulations that may affect cost, progress, and performance of the Work.

D. Bidder has carefully studied all: (1) reports of explorations and tests of subsurface conditions at or adjacent to the Site and all drawings of physical conditions relating to existing surface or subsurface structures at the Site that have been identified in the Supplementary Conditions, especially with respect to Technical Data in such reports and drawings, and (2) reports and drawings relating to Hazardous Environmental Conditions, if any, at or adjacent to the Site that have been identified in the Supplementary Conditions, especially with respect to Technical Data in such reports and drawings.

E. Bidder has considered the information known to Bidder itself; information commonly known to contractors doing business in the locality of the Site; information and

observations obtained from visits to the Site; the Bidding Documents; and any Site-related reports and drawings identified in the Bidding Documents, with respect to the effect of such information, observations, and documents on (1) the cost, progress, and performance of the Work; (2) the means, methods, techniques, sequences, and procedures of construction to be employed by Bidder; and (3) Bidder's safety precautions and programs.

F. Bidder agrees, based on the information and observations referred to in the preceding paragraph, that no further examinations, investigations, explorations, tests, studies, or data are necessary for the determination of this Bid for performance of the Work at the price bid and within the times required, and in accordance with the other terms and conditions of the Bidding Documents.

G. Bidder is aware of the general nature of work to be performed by Owner and others at the Site that relates to the Work as indicated in the Bidding Documents.

H. Bidder has given Engineer written notice of all conflicts, errors, ambiguities, or discrepancies that Bidder has discovered in the Bidding Documents, and confirms that the written resolution thereof by Engineer is acceptable to Bidder.

I. The Bidding Documents are generally sufficient to indicate and convey understanding of all terms and conditions for the performance and furnishing of the Work.

J. The submission of this Bid constitutes an incontrovertible representation by Bidder that Bidder has complied with every requirement of this Article, and that without exception the Bid and all prices in the Bid are premised upon performing and furnishing the Work required by the Bidding Documents.

ARTICLE 4 – BIDDER'S CERTIFICATION

4.01 Bidder certifies that:

A. This Bid is genuine and not made in the interest of or on behalf of any undisclosed individual or entity and is not submitted in conformity with any collusive agreement or rules of any group, association, organization, or corporation;

B. Bidder has not directly or indirectly induced or solicited any other Bidder to submit a false or sham Bid;

C. Bidder has not solicited or induced any individual or entity to refrain from bidding; and

D. Bidder has not engaged in corrupt, fraudulent, collusive, or coercive practices in competing for the Contract. For the purposes of this Paragraph 4.01.D:

1. "corrupt practice" means the offering, giving, receiving, or soliciting of any thing of value likely to influence the action of a public official in the bidding process;

2. "fraudulent practice" means an intentional misrepresentation of facts made (a) to influence the bidding process to the detriment of Owner, (b) to establish bid prices at artificial non-competitive levels, or (c) to deprive Owner of the benefits of free and open competition;

3. "collusive practice" means a scheme or arrangement between two or more Bidders, with or without the knowledge of Owner, a purpose of which is to establish bid prices at artificial, non-competitive levels; and

4. "coercive practice" means harming or threatening to harm, directly or indirectly, persons or their property to influence their participation in the bidding process or affect the e execution of the Contract.

ARTICLE 5 – BASIS OF BID

5.01 Bidder will complete the Work in accordance with the Contract Documents for the following price(s):

Item No.	Description	Unit	Estimated Quantity	Bid Unit Price	Bid Price
1	Furnish and install 6" DR 18 C-900 PVC waterline with appurtenances as specified for the sum of:	LF	7365	15	110,475
2	Furnish and install open/cut and repair driveway crossings with appurtenances for the sum of:	LF	415	10	4,150
3	Furnish and install driveway/ tree bore with 6" PVC and SDR 35 PVC encasement with appurtenances for the sum of:	LF	105	90	9,450
4	Furnish and install gas line crossing with 6" PVC and SDR 35 PVC encasement with appurtenances for the sum of:	LF	50	90	4,500
5	Furnish and install creek bore with 6" Diamond Lok-21 C900 DR-18 PVC with appurtenances for the sum of:	LF	250	110	27,500
6	Furnish and install County Road bore with 6" PVC and SDR 35 PVC encasement with appurtenances for the sum of:	LF	35	90	3,150
7	Furnish and install Farm to Market Road bore with 6" PVC and 12" steel encasement with appurtenances for the sum of:	LF	85	140	11,900
8	Furnish and install 2" cast iron square head FIPT gate valve with appurtenances for the sum of:	EA	2	750	1,500

Item No.	Description	Unit	Estimated Quantity	Bid Unit Price	Bid Price
9	Furnish and install 6" cast iron MJ square head gate valves with appurtenances for the sum of:	EA	2	1,000	2,000
10	Furnish and install 6" cast iron FLxMJ gate valves with appurtenances for the sum of:	EA	3	1,000	3,000
11	Furnish and install ductile iron fittings with appurtenances for the sum of:	TON	.20	10,000	2,000
12	Furnish and install connections to existing waterlines with appurtenances for the sum of:	EA	6	2,000	12,000
13	Furnish and install short side service reconnection with appurtenances for the sum of:	EA	22	800	17,600
14	Furnish and install long side service reconnection with appurtenances for the sum of:	EA	7	1,500	10,500
15	Mobilization, Bonding, and Insurance	LS	1	5%	10,986.25
Total of All Unit Price Bid Items					$230,711.25

Note: the phrase 'with appurtenances' shall be construed to include all sleeves, gland packs, restraining rings, blocking and other such incidentals to ensure a complete and performing installation.

Bidder acknowledges that (1) each Bid Unit Price includes an amount considered by Bidder to be adequate to cover Contractor's overhead and profit for each separately identified item, and (2) estimated quantities are not guaranteed, and are solely for the purpose of comparison of Bids, and final payment for all unit price Bid items will be based on actual quantities, determined as provided in the Contract Documents.

ARTICLE 6 – TIME OF COMPLETION

6.01 Bidder agrees that the Work will be substantially complete and will be completed and ready for final payment in accordance with Paragraph 15.06 of the General Conditions on or before the dates or within the number of calendar days indicated in the Agreement, and as follows:

The Work will be substantially completed within 120 days after the date when the Contract Times commence to run as provided in Paragraph 4.01 of the General Conditions, and completed and ready for final payment in accordance with Paragraph 15.06 of the General Conditions within 150 days after the date when the Contract Times commence to run.

6.02 Bidder accepts the provisions of the Agreement as to liquidated damages.

ARTICLE 7 – ATTACHMENTS TO THIS BID

7.01 The following documents are submitted with and made a condition of this Bid:

A. Required Bid security;

B. Completed Bid Form;

7.02 The following documents may be required to be submitted after bidding as a condition of bid evaluation and award:

A. List of Proposed Subcontractors;

B. List of Proposed Suppliers;

C. List of Project References;

D. Evidence of authority to do business in the state of the Project; or a written covenant to obtain such license within the time for acceptance of Bids;

E. Contractor's License No.: _____ **[or]** Evidence of Bidder's ability to obtain a State Contractor's License and a covenant by Bidder to obtain said license within the time for acceptance of Bids;

F. Required Bidder Qualification Statement with supporting data.

ARTICLE 8 – DEFINED TERMS

8.01 The terms used in this Bid with initial capital letters have the meanings stated in the Instructions to Bidders, the General Conditions, and the Supplementary Conditions.

ARTICLE 9 – BID SUBMITTAL

BIDDER: *[Indicate correct name of bidding entity]*

Patterson Professional Services, LLC

By:
[Signature]

[Printed name] Mark Patterson

(If Bidder is a corporation, a limited liability company, a partnership, or a joint venture, attach evidence of authority to sign.)

Attest:
[Signature] Sarah Patterson

[Printed name] Sarah Patterson

Title: Office assistant

Submittal Date: 01.27.21

Address for giving notices:

PO Box 910

Collinsville, TX 76233

Telephone Number: 903.429.3008

Fax Number: N/A

Contact Name and e-mail address: Mark Patterson

pattproserv@aol.com

Bidder's License No.:
(where applicable)

NOTE TO USER: Use in those states or other jurisdictions where applicable or required.

Corporations Section
P.O.Box 13697
Austin, Texas 78711-3697

Hope Andrade
Secretary of State

Office of the Secretary of State

CERTIFICATE OF FILING
OF

PATTERSON PROFESSIONAL SERVICES, LLC
File Number: 801465211

The undersigned, as Secretary of State of Texas, hereby certifies that a Certificate of Formation for the above named Domestic Limited Liability Company (LLC) has been received in this office and has been found to conform to the applicable provisions of law.

ACCORDINGLY, the undersigned, as Secretary of State, and by virtue of the authority vested in the secretary by law, hereby issues this certificate evidencing filing effective on the date shown below.

The issuance of this certificate does not authorize the use of a name in this state in violation of the rights of another under the federal Trademark Act of 1946, the Texas trademark law, the Assumed Business or Professional Name Act, or the common law.

Dated: 08/11/2011

Effective: 08/11/2011

Hope Andrade
Secretary of State

Form 205
(Revised 05/11)

Submit in duplicate to:
Secretary of State
P.O. Box 13697
Austin, TX 78711-3697
512 463-5555
FAX: 512 463-5709
Filing Fee: $300

This space reserved for office use.

Certificate of Formation
Limited Liability Company

FILED
In the Office of the
Secretary of State of Texas

AUG 11 2011

Corporations Section

Article 1 – Entity Name and Type

The filing entity being formed is a limited liability company. The name of the entity is:

PATTERSON PROFESSIONAL SERVICES, LLC

The name must contain the words "limited liability company," "limited company," or an abbreviation of one of these phrases.

Article 2 – Registered Agent and Registered Office

(See instructions. Select and complete either A or B and complete C.)

☐ A. The initial registered agent is an organization (cannot be entity named above) by the name of:

OR

☒ B. The initial registered agent is an individual resident of the state whose name is set forth below:

First Name	M.I.	Last Name	Suffix
MARK	D	PATTERSON	

C. The business address of the registered agent and the registered office address is:

Street Address	City	State	Zip Code
446 GRAHAMS GROVE RD	COLLINSVILLE	TX	76233

Article 3—Governing Authority

(Select and complete either A or B and provide the name and address of each governing person.)

☒ A. The limited liability company will have managers. The name and address of each initial manager are set forth below.

☐ B. The limited liability company will not have managers. The company will be governed by its members, and the name and address of each initial member are set forth below.

GOVERNING PERSON 1

NAME (Enter the name of either an individual or an organization, but not both.)

IF INDIVIDUAL

First Name	M.I.	Last Name	Suffix
MARK	D	PATTERSON	

OR

IF ORGANIZATION

Organization Name

ADDRESS

Street or Mailing Address	City	State	Country	Zip Code
446 GRAHAMS GROVE RD	COLLINSVILLE	TX	USA	76233

GOVERNING PERSON 2

NAME (Enter the name of either an individual or an organization, but not both.)

IF INDIVIDUAL

DAVID		PATTERSON	
First Name	*M.I.*	*Last Name*	*Suffix*

OR

IF ORGANIZATION

Organization Name

ADDRESS

446 GRAHAMS GROVE RD	COLLINSVILLE	TX	USA	76233
Street or Mailing Address	*City*	*State*	*Country*	*Zip Code*

GOVERNING PERSON 3

NAME (Enter the name of either an individual or an organization, but not both.)

IF INDIVIDUAL

First Name	*M.I.*	*Last Name*	*Suffix*

OR

IF ORGANIZATION

Organization Name

ADDRESS

Street or Mailing Address	*City*	*State*	*Country*	*Zip Code*

Article 4 – Purpose

The purpose for which the company is formed is for the transaction of any and all lawful purposes for which a limited liability company may be organized under the Texas Business Organizations Code.

Supplemental Provisions/Information

Text Area: [The attached addendum, if any, is incorporated herein by reference.]

Organizer

The name and address of the organizer:

JOHN P GRAVES, CPA
Name

502 NORTH LOCUST ST	DENTON	TX	76201
Street or Mailing Address	*City*	*State*	*Zip Code*

Effectiveness of Filing (Select either A, B, or C.)

A. ☒ This document becomes effective when the document is filed by the secretary of state.

B. ☐ This document becomes effective at a later date, which is not more than ninety (90) days from the date of signing. The delayed effective date is: _____

C. ☐ This document takes effect upon the occurrence of the future event or fact, other than the passage of time. The 90th day after the date of signing is: _____

The following event or fact will cause the document to take effect in the manner described below:

Execution

The undersigned affirms that the person designated as registered agent has consented to the appointment. The undersigned signs this document subject to the penalties imposed by law for the submission of a materially false or fraudulent instrument and certifies under penalty of perjury that the undersigned is authorized to execute the filing instrument.

Date: 08-08-2011

J P Graves CPA
Signature of organizer

JOHN P GRAVES, CPA
Printed or typed name of organizer

BID BOND

KNOW ALL MEN BY THESE PRESENTS, that we the undersigned, Patterson Professional Services, LLC as PRINCIPAL, and Endurance American Insurance Company, as SURETY are held and firmly bound unto (City/County) hereinafter called the "Local Public Agency", in the penal sum of Five Percent of the Greatest Amount Bid Dollars, ($ 5% G.A.B.), lawful money of the United States, for the payment of which sum well and truly to be made, we bind ourselves, our heirs, executors, administrators, successors, and assigns, jointly and severally, firmly by these presents.

THE CONDITION OF THIS OBLIGATION IS SUCH, that whereas the Principal has submitted the Accompanying Bid, dated February 04, 2021, for Johnson County - Waterline Project FM 4 & CR 121 TXCDBG 7218250

NOW, THEREFORE, the Principal shall not withdraw said Bid within the period specified therein after the opening of the same, or, if no period be specified, within thirty (30) days after the said opening, and shall within the period specified therefor, or if no period be specified, within ten (10) days after the prescribed forms are presented to him for signature, enter into a written contract with the Local Public Agency in accordance with the Bid as accepted, and give bond with good and sufficient surety or sureties, as may be required, for the faithful performance and proper fulfillment of such contract; or in the event of the withdrawal of said Bid within the period specified, or the failure to enter into such Contract and give such bond within the time specified, if the Principal shall pay the Local Public Agency the difference between the amount specified in said Bid and the amount for which the local Public Agency may procure the required work or supplies or both, if the latter be in excess of the former, then the above obligation shall be void and of no effect, otherwise to remain in full force and virtue.

IN WITNESS THEREOF, the above parties have executed this instrument this 4th day of February 2021, the name and corporate seal of each corporate party being hereto affixed and these present signed by its undersigned representative, pursuant to authority of its governing body.

(SEAL)

Patterson Professional Services, LLC

(SEAL)

Attest: Allan Patterson

By: Mark Patterson President

Affix Corporate Seal

Endurance American Insurance Company

Attest: Neira Hernandez, Witness

By: Chandler Nazzal, Attorney-in-Fact

Affix Corporate

Seal

Attest: By: N/A

Countersigned

By N/A

* Attorney-in-Fact, State of Texas

CERTIFICATE AS TO CORPORATE PRINCIPAL

I, _____. certify that I am the Secretary of the Corporation named as Principal in the bid bond; that _____, who signed the said bond on behalf of the Principal was then _____ of said corporation; that I know his/her signature, and his/her signature thereto is genuine; and that said bond was duly signed, sealed, and attested to, on behalf of said corporation by authority of its governing body.

Corporate Seal

Title: _____

* Power-of-attorney for person signing for Surety Company must be attached to bond.

POLICYHOLDER NOTICE

TEXAS - IMPORTANT NOTICE

To obtain information or make a complaint:
You may call the company's telephone number for information or to make a complaint at:

1-212-471-2800

You may write the Company at:

Endurance American Insurance Company
Attention: <<Business Unit>>
750 Third Avenue
New York, NY 10017

You may contact the Texas Department of Insurance to obtain information on companies, coverages, rights or complaints at:

1-800-252-3439

You may write the

Texas Department of Insurance
PO Box 149104
Austin, TX 78714-9104
FAX# (512) 475-1771

Web: http://www.tdi. texas.gov

E-mail: ConsumerProtection@tdi. texas.gov

PREMIUM OR CLAIM DISPUTES: Should you have a dispute concerning your premium or about a claim you should contact the company first. If the dispute is not resolved, you may contact the Texas Department of Insurance.

ATTACH THIS NOTICE TO YOUR POLICY: This notice is for information only and does not become a part or condition of the attached document.

AVISO IMPORTANTE

Para obtener informacion o para someter una queja:
Usted puede llamar al numero de telefono de la compania para informacion o para someter una queja al:

1-212-471-2800

Usted tambien puede escribir a:

Endurance American Insurance Company
Attention: <<Business Unit>>
750 Third Avenue
New York, NY 10017

Puede communicarse con el Departamento de Seguros de Texas para obtener informacion acerca de companias, coberturas, derechos o quejas al:

1-800-252-3439

Puede escribir al

Departamento de Seguros de Texas
PO Box 149104
Austin, TX 78714-9104
FAX# (512) 475-1771

Web: http://www.tdi. texas.gov

E-mail: ConsumerProtection@tdi. texas.gov

DISPUTAS SOBRE PRIMAS O RECLAMOS: Si tiene una disputa concerniente a su prima o a un reclamo, debe comunicarse con la compania primero. Si no se resuelve la disputa, puede entonces comunicarse con el departamento (TDI).

UNA ESTE AVISO A SU POLIZA: Este aviso es solo para proposito de informacion y no se convierte en parte o condicion del documento adjunto.

SOMPO INTERNATIONAL
INSURANCE

POWER OF ATTORNEY

11510

KNOW ALL BY THESE PRESENTS, that **Endurance Assurance Corporation**, a Delaware corporation, **Endurance American Insurance Company**, a Delaware corporation, **Lexon Insurance Company**, a Texas corporation, and/or **Bond Safeguard Insurance Company**, a South Dakota corporation, each, a "Company" and collectively, "**Sompo International**," do hereby constitute and appoint: **Chandler Nazzal, John A. Aboumrad, William D. Baldwin, Brent Baldwin, Brock Baldwin, Brady K. Cox, Blaine Allen, Russ Frenzel** as true and lawful Attorney(s)-In-Fact to make, execute, seal, and deliver for, and on its behalf as surety or co-surety; bonds and undertakings given for any and all purposes, also to execute and deliver on its behalf as aforesaid renewals, extensions, agreements, waivers, consents or stipulations relating to such bonds or undertakings provided, however, that no single bond or undertaking so made, executed and delivered shall obligate the Company for any portion of the penal sum thereof in excess of the sum of **ONE HUNDRED MILLION Dollars ($100,000,000.00)**.

Such bonds and undertakings for said purposes, when duly executed by said attorney(s)-in-fact, shall be binding upon the Company as fully and to the same extent as if signed by the President of the Company under its corporate seal attested by its Corporate Secretary.

This appointment is made under and by authority of certain resolutions adopted by the sole shareholder of each Company by unanimous written consent effective the 15th day of June, 2019, a copy of which appears below under the heading entitled "Certificate".

This Power of Attorney is signed and sealed by facsimile under and by authority of the following resolution adopted by the sole shareholder of each Company by unanimous written consent effective the 15th day of June, 2019 and said resolution has not since been revoked, amended or repealed:

RESOLVED, that the signature of an individual named above and the seal of the Company may be affixed to any such power of attorney or any certificate relating thereto by facsimile, and any such power of attorney or certificate bearing such facsimile signature or seal shall be valid and binding upon the Company in the future with respect to any bond or undertaking to which it is attached.

IN WITNESS WHEREOF, each Company has caused this instrument to be signed by the following officers, and its corporate seal to be affixed this 15th day of June, 2019.

Endurance Assurance Corporation	Endurance American Insurance Company	Lexon Insurance Company	Bond Safeguard Insurance Company
By: Richard M. Appel	By: Richard M. Appel	By: Richard M. Appel	By: Richard M. Appel
Richard Appel; SVP & Senior Counsel	Richard Appel; SVP & Senior Counsel	Richard Appel; SVP & Senior Counsel	Richard Appel; SVP & Senior Counsel
Endurance Assurance Corporation CORPORATE SEAL 2002 DELAWARE	Endurance American Insurance Company CORPORATE SEAL 1996 DELAWARE	LEXON INSURANCE COMPANY CORPORATE SEAL MARCH 15, 1984 STATE OF TEXAS	BOND SAFEGUARD INSURANCE COMPANY A SOUTH DAKOTA INSURANCE COMPANY

ACKNOWLEDGEMENT

On this 15th day of June, 2019, before me, personally came the above signatories known to me, who being duly sworn, did depose and say that he/they is an officer of each of the Companies; and that he executed said instrument on behalf of each Company by authority of his office under the by-laws of each Company.

By: Amy Taylor
Amy Taylor, Notary Public - My Commission Expires 5/9/23

AMY TAYLOR STATE OF TENNESSEE NOTARY PUBLIC DAVIDSON COUNTY

CERTIFICATE

I, the undersigned Officer of each Company, DO HEREBY CERTIFY that:

1. That the original power of attorney of which the foregoing is a copy was duly executed on behalf of each Company and has not since been revoked, amended or modified; that the undersigned has compared the foregoing copy thereof with the original power of attorney, and that the same is a true and correct copy of the original power of attorney and of the whole thereof;
2. The following are resolutions which were adopted by the sole shareholder of each Company by unanimous written consent effective June 15, 2019 and said resolutions have not since been revoked, amended or modified:

   "RESOLVED, that each of the individuals named below is authorized to make, execute, seal and deliver for and on behalf of the Company any and all bonds, undertakings or obligations in surety or co-surety with others: RICHARD M. APPEL, BRIAN J. BEGGS, CHRISTOPHER DONELAN, SHARON L. SIMS, CHRISTOPHER L. SPARRO, MARIANNE L. WILBERT

   ; and be it further

   RESOLVED, that each of the individuals named above is authorized to appoint attorneys-in-fact for the purpose of making, executing, sealing and delivering bonds, undertakings or obligations in surety or co-surety for and on behalf of the Company."
3. The undersigned further certifies that the above resolutions are true and correct copies of the resolutions as so recorded and of the whole thereof.

IN WITNESS WHEREOF, I have hereunto set my hand and affixed the corporate seal this 4th day of February, 2021.

By:
Daniel S. Lurie, Secretary

NOTICE: U. S. TREASURY DEPARTMENT'S OFFICE OF FOREIGN ASSETS CONTROL (OFAC)

No coverage is provided by this Notice nor can it be construed to replace any provisions of any surety bond or other surety coverage provided. This Notice provides information concerning possible impact on your surety coverage due to directives issued by OFAC. **Please read this Notice carefully.**

The Office of Foreign Assets Control (OFAC) administers and enforces sanctions policy, based on Presidential declarations of "national emergency". OFAC has identified and listed numerous foreign agents, front organizations, terrorists, terrorist organizations, and narcotics traffickers as "Specially Designated Nationals and Blocked Persons". This list can be located on the United States Treasury's website – https://www.treasury.gov/resource-center/sanctions/SDN-List.

In accordance with OFAC regulations, if it is determined that you or any other person or entity claiming the benefits of any coverage has violated U.S. sanctions law or is a Specially Designated National and Blocked Person, as identified by OFAC, any coverage will be considered a blocked or frozen contract and all provisions of any coverage provided are immediately subject to OFAC. When a surety bond or other form of surety coverage is considered to be such a blocked or frozen contract, no payments nor premium refunds may be made without authorization from OFAC. Other limitations on the premiums and payments may also apply.

Any reproductions are void.

Surety Claims Submission: LexonClaimAdministration@sompo-intl.com
Telephone: 615-553-9500 Mailing Address: Sompo International; 12890 Lebanon Road; Mount Juliet, TN 37122-2870

Certificate of Interested Parties Instructions

The last session of the Legislature saw the passage of House Bill 1295, which, in part, enacted a new Section 2252.908 to the Texas Government Code. This legislation generally prohibits a city from entering into certain contracts with a business entity unless the business entity submits a form (Form 1295) entitled "Certificate of Interested Parties." Although the bill became effective on September 1, 2015, the reporting applies only to a contract entered into on or after January 1, 2016.

The Texas Ethics Commission, charged with adopting rules to implement the new statute, developed Form 1295. Form 1295 is available on the Commission's website (www.ethics.state.tx.us), along with an instructional video. Specifically, as referenced in information from the Texas Municipal League, the Form 1295 process is as follows:

- A business entity must use the application to enter the required information on Form 1295 and print a copy of the form and a separate certification of filing that will contain a unique certification number.

- An authorized agent of the business entity must sign the printed copy of the form and have the form notarized. The completed Form 1295 and certification of filing must be filed with the city "at the time the business entity submits the signed contract" to the city.

- The city must notify the Commission, using the Commission's filing application, of the receipt of the filed Form 1295 and certification of filing not later than the 30th day after the date the contract binds all parties to the contract.

The URL for the website where contractors and cities input the information regarding Form 1295 is as follows:

https://www.ethics.state.tx.us/whatsnew/elf_info_form1295.htm

CERTIFICATE OF INTERESTED PARTIES

FORM 1295

Complete Nos. 1 - 4 and 6 if there are interested parties.
Complete Nos. 1, 2, 3, 5, and 6 if there are no interested parties.

OFFICE USE ONLY
CERTIFICATION OF FILING

Certificate Number:
2021-708463

Date Filed:
01/21/2021

Date Acknowledged:

1 Name of business entity filing form, and the city, state and country of the business entity's place of business.

Patterson Professional Services, LLC
Collinsville, TX United States

2 Name of governmental entity or state agency that is a party to the contract for which the form is being filed.

Johnson County Special Utility District

3 Provide the identification number used by the governmental entity or state agency to track or identify the contract, and provide a description of the services, goods, or other property to be provided under the contract.

TxCDBG 7218250
construction of waterline improvements

4 Name of Interested Party	City, State, Country (place of business)	Nature of Interest (check applicable)	
		Controlling	Intermediary

5 Check only if there is NO Interested Party. [X]

6 UNSWORN DECLARATION

My name is Mark Patterson, and my date of birth is 12.25.61.

My address is 340 Hogtown Road (street), Collinsville (city), TX (state), 76233 (zip code), USA (country).

I declare under penalty of perjury that the foregoing is true and correct.

Executed in Grayson County, State of Texas, on the 27 day of January (month), 2021 (year).

Signature of authorized agent of contracting business entity
(Declarant)

CONFLICT OF INTEREST QUESTIONNAIRE

FORM CIQ

For vendor doing business with local governmental entity

This questionnaire reflects changes made to the law by H.B. 23, 84th Leg., Regular Session.

This questionnaire is being filed in accordance with Chapter 176, Local Government Code, by a vendor who has a business relationship as defined by Section 176.001(1-a) with a local governmental entity and the vendor meets requirements under Section 176.006(a).

By law this questionnaire must be filed with the records administrator of the local governmental entity not later than the 7th business day after the date the vendor becomes aware of facts that require the statement to be filed. *See* Section 176.006(a-1), Local Government Code.

A vendor commits an offense if the vendor knowingly violates Section 176.006, Local Government Code. An offense under this section is a misdemeanor.

OFFICE USE ONLY

Date Received

1 **Name of vendor who has a business relationship with local governmental entity.**

N/A

2 ☐ **Check this box if you are filing an update to a previously filed questionnaire.** (The law requires that you file an updated completed questionnaire with the appropriate filing authority not later than the 7th business day after the date on which you became aware that the originally filed questionnaire was incomplete or inaccurate.)

3 **Name of local government officer about whom the information is being disclosed.**

_____

Name of Officer

4 **Describe each employment or other business relationship with the local government officer, or a family member of the officer, as described by Section 176.003(a)(2)(A). Also describe any family relationship with the local government officer. Complete subparts A and B for each employment or business relationship described. Attach additional pages to this Form CIQ as necessary.**

A. Is the local government officer or a family member of the officer receiving or likely to receive taxable income, other than investment income, from the vendor?

☐ Yes ☐ No

B. Is the vendor receiving or likely to receive taxable income, other than investment income, from or at the direction of the local government officer or a family member of the officer AND the taxable income is not received from the local governmental entity?

☐ Yes ☐ No

5 **Describe each employment or business relationship that the vendor named in Section 1 maintains with a corporation or other business entity with respect to which the local government officer serves as an officer or director, or holds an ownership interest of one percent or more.**

6 ☐ Check this box if the vendor has given the local government officer or a family member of the officer one or more gifts as described in Section 176.003(a)(2)(B), excluding gifts described in Section 176.003(a-1).

7

_____ Signature of vendor doing business with the governmental entity

_____ Date

Form provided by Texas Ethics Commission www.ethics.state.tx.us Revised 11/30/2015

NONCOLLUSION AFFIDAVIT OF PRIME BIDDER

State of Texas)

County of Johnson)

Mark Patterson, being first duly sworn, deposes and says that:

(1) He/She is President of Patterson Professional Services, LLC, the Bidder that has submitted the attached Bid;

(2) He/She is fully informed respecting the preparation and contents of the attached Bid and of all pertinent circumstances respecting such Bid;

(3) Such Bid is genuine and is not a collusive or sham Bid;

(4) Neither the said Bidder nor any of its officers, partners, owners, agents, representatives, employees or parties in interest, including this affiant, has in any way colluded, conspired, connived or agreed, directly or indirectly with another Bidder, firm or person to submit a collusive or sham Bid in connection with the Contract for which the attached Bid has been submitted or to refrain from bidding in connection with such Contract, or has in any manner, directly or indirectly, sought by agreement or collusion or communication or conference with any other Bidder, firm or person to fix the price or prices in the attached Bid or of any other Bidder, or to fix an overhead, profit or cost element of the Bid price or the Bid price of any other Bidder, or to secure through any collusion, conspiracy, connivance or unlawful agreement any advantage against the Johnson County (Local Public Agency) or any person interested in the proposed Contract; and

(5) The price or prices quoted in the attached Bid are fair and proper and are not tainted by any collusion, conspiracy, connivance or unlawful agreement on the part of the Bidder or any of its agents, representatives, owners, employees, or parties in interest, including this affiant.

(Signed) _____

Mark Patterson, President

Title

Subscribed and sworn to me this 27 day of January.

By: Augusta Rose Scott

Notary Public

My commission expires 1/6/2025

AUGUSTA ROSE SCOTT
My Notary ID # 132853125
Expires January 6, 2025

CONTRACTOR CERTIFICATIONS

U.S. Department of Housing and Urban Development

CERTIFICATION OF BIDDER REGARDING CIVIL RIGHTS LAWS AND REGULATIONS

INSTRUCTIONS

CERTIFICATION OF BIDDER REGARDING Executive Order 11246 and Federal Laws Requiring Federal Contractor to adopt and abide by equal employment opportunity and affirmative action in their hiring, firing, and promotion practices. This includes practices related to race, color, gender, religion, national origin, disability, and veterans' rights.

NAME AND ADDRESS OF BIDDER (include ZIP Code)

Patterson Professional Services, LLC
PO Box 910
Collinsville, TX 76233

CERTIFICATION BY BIDDER

Bidder has participated in a previous contract or subcontract subject to Civil Rights Laws and Regulations.

☒ Yes ☐ No

The undersigned hereby certifies that:

☒ The Provision of Local Training, Employment, and Business Opportunities clause (Section 3 provision) is included in the Contract. A written Section 3 plan (Local Opportunity Plan) was prepared and submitted as part of the bid proceedings (if bid equals or exceeds $100,000).

☒ The Equal Opportunity clause is included in the Contract (if bid equals or exceeds $10,000).

Have you ever been or are you being considered for sanction due to violation of Executive Order 11246, as amended?

☐ Yes ☒ No

Mark Patterson, President

NAME AND TITLE OF SIGNER (Please type)

01.27.21

SIGNATURE DATE

CONTRACTOR'S LOCAL OPPORTUNITY PLAN

Patterson Professional Services, LLC
(name of company) agrees to implement the following specific affirmative action steps directed at increasing the utilization of lower income residents and businesses within the (City/County) of Johnson.

A. To ascertain from the City/County's CDBG program official the exact boundaries of the project area and where advantageous, seek the assistance of local officials in preparing and implementing the affirmative action plan.
B. To attempt to recruit from within the city the necessary number of lower income residents through: local advertising media, signs placed at the proposed site for the project, and community organizations and public or private institutions operating within and servicing the project area such as Service Employment and Redevelopment (SER), Opportunities Industrialization Center (OIC), Urban League, Concentrated Employment Program, Hometown Plan, or the U.S. Employment Service.
C. To maintain a list of all lower income residents who have applied either on their own or on referral from any source, and to employ such persons, if otherwise eligible and if a vacancy exists.
D. To insert this plan in all bid documents and to require all bidders on subcontracts to submit an affirmative action plan including utilization goals and the specific steps planned to accomplish these goals.
E. To ensure that subcontracts (greater than $10,000), which are typically let on a negotiated rather than a bid basis in areas other than the covered project area, are also let on a negotiated basis, whenever feasible, in a covered project area.
F. To formally contact unions, subcontractors, and trade associations to secure their cooperation in this effort.
G. To ensure that all appropriate project area business concerns are notified of pending sub-contractual opportunities.
H. To maintain records, including copies of correspondence, memoranda, etc., which document that all of the above affirmative action steps have been taken.
I. To appoint or recruit an executive official of the company or agency as Equal Opportunity Officer to coordinate the implementation of this plan.
J. To maintain records concerning the amount and number of contracts, subcontracts, and purchases which contribute to objectives.
K. To maintain records of all projected work force needs for all phases of the project by occupation, trade, skill level, and number of positions and to update these projections based on the extent to which hiring meets these Local Opportunity objectives.

As officers and representatives of Patterson Professional Services, LLC (name of company), we the undersigned have read and fully agree to this Plan, and become a party to the full implementation of the program and its provisions.

Signature

Mark Patterson
Printed Name

President
Title

01.27.21
Date

PROPOSED CONTRACTS BREAKDOWN

Type of Contracts	No. of Contracts	Approx. Total Dollar Amount	Estimated No. to local Business	Estimated $ Amount Local Business
Materials	1	$150,000		

ESTIMATED PROJECT WORKFORCE BREAKDOWN

Work Classifications	Total Estimated Positions	No. of Positions Currently Filled	No. of Positions not Filled	No. of Positions to fill with LMI Residents (Section 3)
Project Manager	1	1	0	0
Backhoe Operator	2	2	0	0
Pipe Layer	4	4	0	0
Totals	7	7	0	0

Certification Regarding Lobbying

(To be submitted with each bid or offer exceeding $100,000)

The undersigned certifies, to the best of his or her knowledge and belief, that:

(a) No Federal appropriated funds have been paid or will be paid, by or on behalf of the undersigned, to any person for influencing or attempting to influence an officer or employee of an agency, a Member of Congress, an officer or employee of Congress, or an employee of a Member of Congress in connection with the awarding of any Federal contract, the making of any Federal grant, the making of any Federal loan, the entering into of any cooperative agreement, and the extension, continuation, renewal, amendment, or modification of any Federal contract, grant, loan, or cooperative agreement.

(b) If any funds other than Federal appropriated funds have been paid or will be paid to any person for influencing or attempting to influence an officer or employee of any agency, a Member of Congress, an officer or employee of Congress, or an employee of a Member of Congress in connection with this Federal contract, grant, loan, or cooperative agreement, the undersigned shall complete and submit Standard Form-LLL, "Disclosure Form to Report Lobbying," in accordance with its instructions.

(c) The undersigned shall require that the language paragraph 1 and 2 of this anti-lobbying certification be included in the award documents for all subawards at all tiers (including subcontracts, subgrants, and contracts under grants, loans, and cooperative agreements) and that all subrecipients shall certify and disclose accordingly.

This certification is a material representation of fact upon which reliance was placed when this transaction was made or entered into. Submission of this certification is a prerequisite for making or entering into this transaction imposed by 31, U.S.C. § 1352 (as amended by the Lobbying Disclosure Act of 1995).

The Contractor, Patterson Professional Services, LLC, certifies or affirms the truthfulness and accuracy of each statement of its certification and disclosure, if any. In addition, the Contractor understands and agrees that the provisions of 31 U.S.C. § 3801 *et seq.*, apply to this certification and disclosure, if any.

Signature of Contractor's Authorized Official

Mark Patterson, President
Printed Name and Title of Contractor's Authorized Official

01.27.21
Date

Disclosure of Lobbying Activities

Complete this form to disclose lobbying activities pursuant to 31 U.S.C. 1352
(See reverse for public burden disclosure)

1. Type of Federal Action: a. contract ____ b. grant N/A c. cooperative agreement d. loan e. loan guarantee f. loan insurance	**2. Status of Federal Action:** a. bid/offer/application ____ b. initial award c. post-award	**3. Report Type:** a. initial filing ____ b. material change **For material change only:** Year _____ quarter _____ Date of last report_____
4. Name and Address of Reporting Entity: ____ Prime ____ Subawardee Tier_____, if Known: **Congressional District,** ***if known:***	**5. If Reporting Entity in No. 4 is Subawardee,** Enter Name and Address of Prime: **Congressional District,** ***if known:***	
6. Federal Department/Agency:	**7. Federal Program Name/Description:** CFDA Number, *if applicable*: _____	
8. **Federal Action Number,** ***if known:***	9. **Award Amount,** ***if known:*** **$**	
10. a. Name and Address of Lobbying Registrant *(if individual, last name, first name, MI):*	**b. Individuals Performing Services** *(including address if different from No. 10a)* *(last name, first name, MI):*	
11. Information requested through this form is authorized by title 31 U.S.C. section 1352. This disclosure of lobbying activities is a material representation of fact upon which reliance was placed by the tier above when this transaction was made or entered into. This disclosure is required pursuant to 31 U.S.C. 1352. This information will be reported to the Congress semi-annually and will be available for public inspection. Any person who fails to file the required disclosure shall be subject to a civil penalty of not less than $10,000 and not more than $100,000 for each such failure.	**Signature:** _____ **Print Name:** _____ **Title:** _____ **Telephone No.:** _____ **Date:** _____	
Federal Use Only	**Authorized for Local Reproduction** **Standard Form - LLL (Rev. 7-97)**	

Statement of Bidder's Qualifications
(To be submitted by the BIDDER ONLY upon the request of the OWNER)

To allow the OWNER to determine the lowest responsible BIDDER, the following information shall be provided. Attach separate sheets as needed.

1. **Name of Bidder:** Patterson Professional Services, LLC
2. **Type of organization:** LLC
3. **Permanent main office address:** 9963 S US Hwy 377, Collinsville, TX 76233
4. **When organized:** 2011
5. **If a coporation, where incoporated:** Grayson County, TX
6. **State how many years have you been engaged in the contracting business under your present firm or trade name, and give all other names under which your organization has operated in the last 10 years:** 9
7. **State the name of all coporate officers, or partners, or the owners, as appropriate:**
   Mark Patterson-President, David Patterson-secretary/treasurer
8. **State the company tax identification number, or, if a sole proprietor, the proprietor's social security number:** 45-3049103
9. **Contracts on hand:(Schedule these, showing amount of each contract and the appropriate dates and current percent of completion). Provide name, address, and telephone number of the project owner and the engineer:** See Schedule A
10. **General Character of work performed by your company:**
    wastewater/water operations, maintenance and contruction
11. **Have you ever failed to complete any work awarded to you?** No
12. **Have you ever defaulted on a contract? If so, where and why?** No
13. **List your important projects, of similar size recently completed by your company, and for whom, stating the approximate cost for each, and the month and year completed. Provide name, address, and telephone number of the project owner and engineer.**
    See Schedule A & B (current & previous projects)
14. **List your major equipment available for this contract:** See Schedule C
15. **Experience in contruction work similar in importance to this project:** See Schedule D
16. **Background and experience of the principal members of your organization, including the officers and proposed project Superintendent:**
    See Attached resume for Mark & David Patterson
17. **Credit available:** N/A
18. **Give three credit references, one of which must be a financial institution.**
    See Attachment
19. **State the name and address of each of your Workmen's Compensation insurance carriers for the last 5 years.**
    Texas Mutual, 5+ years, PO Box 841843, Dallas, TX 75284
20. **List each claim made against you by your employees or third parties for personal injury, death, or property damage in each of the last 3 years.** None

21. **List any and all litigation including arbitrations, administrative proceedings, and mediation in which you have been a plaintiff or defendant involving any owner, architect or engineer over the past 5 years. This list should be in sufficient detail to explain the positions of the various parties and the ultimate outcome as to the damage awarded(if any). This list shall be considered material as respects the final awarding of any contract conncected with the bid. (state "none" or submit information on atached sheet)** None
22. **The undersigned hereby autorizes and requests any person, firm, or corporation to furnish any information requested by the OWNER in verification of the recitals comprising this Statement of Bidder's Qualifications.**

Dated at 3:15 pm, this 25 day of January 20 21

Patterson Professional Services, LLC
Name of Bidder
By: Mark Patterson
Title: President

STATE OF Texas
COUNTY OF Grayson
Mark Patterson, Being duly sworn, deposes and says that he is President of Patterson Professional Services, and that the answers to the foregoing questions and all statements therein contained are true and correct.

Suscribed and sworn to before me this 25 day of January, 20 21

Augusta Rose Scott
Notarty Public
My commisions expires: 1/6/2025

AUGUSTA ROSE SCOTT
My Notary ID # 132853125
Expires January 6, 2025

	(D) Davis-Bacon Act, as amended (40 U.S.C. 3141-3148). When required by Federal program legislation, all prime construction contracts in excess of $2,000 awarded by non-Federal entities must include a provision for compliance with the Davis-Bacon Act (40 U.S.C. 3141-3144, and 3146-3148) as supplemented by Department of Labor regulations (29 CFR Part 5, "Labor Standards Provisions Applicable to Contracts Covering Federally Financed and Assisted Construction"). In accordance with the statute, contractors must be required to pay wages to laborers and mechanics at a rate not less than the prevailing wages specified in a wage determination made by the Secretary of Labor. In addition, contractors must be required to pay wages not less than once a week. The non-Federal entity must place a copy of the current prevailing wage determination issued by the Department of Labor in each solicitation. The decision to award a contract or subcontract must be conditioned upon the acceptance of the wage determination. The non-Federal entity must report all suspected or reported violations to the Federal awarding agency. The contracts must also include a provision for compliance with the Copeland "Anti-Kickback" Act (40 U.S.C. 3145), as supplemented by Department of Labor regulations (29 CFR Part 3, "Contractors and Subcontractors on Public Building or Public Work Financed in Whole or in Part by Loans or Grants from the United States"). The Act provides that each contractor or subrecipient must be prohibited from inducing, by any means, any person employed in the construction, completion, or repair of public work, to give up any part of the compensation to which he or she is otherwise entitled. The non-Federal entity must report all suspected or reported violations to the Federal awarding agency.	
>$10,000	*Italics – Explanatory; not contract language)* *2 CFR 200 Appendix II (C) Equal Employment Opportunity. Except as otherwise provided under 41 CFR Part 60, all contracts that meet the definition of "federally assisted construction contract" in 41 CFR Part 60–1.3 must include the equal opportunity clause provided under 41 CFR 60–1.4(b), in accordance with Executive Order 11246, "Equal Employment Opportunity" (30 FR 12319, 12935, 3 CFR Part, 1964–1965 Comp., p. 339), as amended by Executive Order 11375, "Amending Executive Order 11246 Relating to Equal Employment Opportunity," and implementing regulations at 41 CFR part 60, "Office of Federal Contract Compliance Programs, Equal Employment Opportunity, Department of Labor."* *Therefore, include the following EO clause (not in italics) in construction contracts including construction associated administration and engineering contracts > $10,000:* § **60-1.4(b) Equal opportunity clause.** (b) Federally assisted construction contracts. Except as otherwise provided, each administering agency shall require the inclusion of the following language as a condition of any grant, contract, loan, insurance, or guarantee involving federally assisted construction which is not exempt from the requirements of the equal opportunity clause: The applicant hereby agrees that it will incorporate or cause to be incorporated into any contract for construction work, or modification thereof, as defined in the regulations of the Secretary of Labor at 41 CFR chapter 60, which is paid for in whole or in part with funds obtained from the Federal Government or borrowed on the credit of the Federal Government pursuant to a grant, contract, loan insurance, or guarantee, or undertaken pursuant to any Federal program involving such grant, contract, loan, insurance, or guarantee, the following equal opportunity clause: During the performance of this contract, the contractor agrees as follows: (1) The contractor will not discriminate against any employee or applicant for employment because of race, color, religion, sex, sexual orientation, gender	41 CFR §60-1.4(b) And 2 CFR 200 APPENDIX II (C)

	3 preference, shall set forth minimum number and job titles subject to hire, availability of apprenticeship and training positions, the qualifications for each; and the name and location of the person(s) taking applications for each of the positions; and the anticipated date the work shall begin. D. The contractor agrees to include this section 3 clause in every subcontract subject to compliance with regulations in 24 CFR part 135, and agrees to take appropriate action, as provided in an applicable provision of the subcontract or in this section 3 clause, upon a finding that the subcontractor is in violation of the regulations in 24 CFR part 135. The contractor will not subcontract with any subcontractor where the contractor has notice or knowledge that the subcontractor has been found in violation of the regulations in 24 CFR part 135. E. The contractor will certify that any vacant employment positions, including training positions, that are filled (1) after the contractor is selected but before the contract is executed, and (2) with persons other than those to whom the regulations of 24 CFR part 135 require employment opportunities to be directed, were not filled to circumvent the contractor's obligations under 24 CFR part 135. F. Noncompliance with HUD's regulations in 24 CFR part 135 may result in sanctions, termination of this contract for default, and debarment or suspension from future HUD assisted contracts. G. With respect to work performed in connection with section 3 covered Indian housing assistance, section 7(b) of the Indian Self-Determination and Education Assistance Act (25 U.S.C. 450e) also applies to the work to be performed under this contract. Section 7(b) requires that to the greatest extent feasible (i) preference and opportunities for training and employment shall be given to Indians, and (ii) preference in the award of contracts and subcontracts shall be given to Indian organizations and Indian-owned Economic Enterprises. Parties to this contract that are subject to the provisions of section 3 and section 7(b) agree to comply with section 3 to the maximum extent feasible, but not in derogation of compliance with section 7(b).	

Construction Contracts

THRESHOLD	PROVISION	CITATION
>$2,000 for Davis Bacon and Copeland "Anti-Kickback" Act; >$100,000 for Contract Work Hours and Safety Standards Act	*HUD 4010 Federal labor standards provisions include:* 1. *Davis Bacon Act (40 U.S.C. 3141 et seq.) as supplemented by DOL regulations (29 CFR part 5);* 2. *Copeland "Anti-Kickback" Act (40 U.S.C. 3145), as supplemented by Department of Labor regulations (29 CFR Part 3); and* 3. *Contract Work Hours and Safety Standards Act (40 U.S.C. 3701 et seq.)* *See HUD 4010 contract language in Appendix F. Inclusion of this language into the construction contract satisfies contract requirements of the separate acts noted.*	
>$2,000 (Satisfied with inclusion of HUD 4010)	*Compliance with the Davis-Bacon Act (40 U.S.C. 3141 et seq.) as supplemented by Department of Labor regulations (29 CFR part 5) and with the Copeland "Anti-Kickback" Act (18 U.S.C. 874; 40 U.S.C. 3145) as supplemented in Department of Labor regulations (29 CFR part 3):*	2 CFR 200 APPENDIX II (D)

None	Sec. 176.003. CONFLICTS DISCLOSURE STATEMENT REQUIRED. (a) A local government officer shall file a conflicts disclosure statement with respect to a vendor if: (1) the vendor enters into a contract with the local governmental entity or the local governmental entity is considering entering into a contract with the vendor; and (2) the vendor: (A) has an employment or other business relationship with the local government officer or a family member of the officer that results in the officer or family member receiving taxable income, other than investment income, that exceeds $2,500 during the 12-month period preceding the date that the officer becomes aware that: (i) a contract between the local governmental entity and vendor has been executed; or (ii) the local governmental entity is considering entering into a contract with the vendor; (B) has given to the local government officer or a family member of the officer one or more gifts that have an aggregate value of more than $100 in the 12-month period preceding the date the officer becomes aware that: (i) a contract between the local governmental entity and vendor has been executed; or (ii) the local governmental entity is considering entering into a contract with the vendor; or has a family relationship with the local government officer. (a-1) A local government officer is not required to file a conflicts disclosure statement in relation to a gift accepted by the officer or a family member of the officer if the gift is: (1) a political contribution as defined by Title 15, Election Code; or (2) food accepted as a guest. (a-2) A local government officer is not required to file a conflicts disclosure statement under Subsection (a) if the local governmental entity or vendor described by that subsection is an administrative agency created under Section 791.013, Government Code. (b) A local government officer shall file the conflicts disclosure statement with the records administrator of the local governmental entity not later than 5 p.m. on the seventh business day after the date on which the officer becomes aware of the facts that require the filing of the statement under Subsection (a).	Chapter 176 of the Local Government Code
>$10,000	*(B) All contracts in excess of $10,000 must address termination for cause and for convenience by the non-Federal entity including the manner by which it will be effected and the basis for settlement.* Use the following language for contracts > $ 10,000: <u>Termination for Cause</u> If the Contractor fails to fulfill in a timely and proper manner its obligations under this Agreement, or if the Contractor violates any of the covenants, conditions, agreements, or stipulations of this Agreement, the City/County shall have the right to terminate this Agreement by giving written notice to the Contractor of such termination and specifying the effective date thereof, which shall be at least five days before the effective date of such termination. In the event of termination for cause, all finished or unfinished documents, data, studies, surveys, drawings, maps, models, photographs and reports prepared by the Contractor pursuant to this Agreement shall, at the option of the City/County, be turned over to the City / County and become the property of the City / County. In the event of termination for cause, the Contractor shall be entitled to receive reasonable compensation	2 CFR 200 APPENDIX II (B)

REQUIRED CONTRACT PROVISIONS
Table of Contents

REQUIRED CONTRACT PROVISIONS

Italics – Explanatory; not contract language

All Contracts

THRESHOLD	PROVISION	CITATION
None	(H) Debarment and Suspension (Executive Orders 12549 and 12689)—A contract award (see 2 CFR 180.220) must not be made to parties listed on the government-wide Excluded Parties List System in the System for Award Management (SAM), in accordance with the OMB guidelines at 2 CFR 180 that implement Executive Orders 12549 (3 CFR Part 1986 Comp., p. 189) and 12689 (3 CFR Part 1989 Comp., p. 235), "Debarment and Suspension." SAM Exclusions contains the names of parties debarred, suspended, or otherwise excluded by agencies, as well as parties declared ineligible under statutory or regulatory authority other than Executive Order 12549.	2 CFR 200 APPENDIX II (H)
None	The U.S. Department of Housing and Urban Development (HUD), Inspectors General, the Comptroller General of the United States, and the Texas Department of Agriculture (TDA), and the City/County, or any of their authorized representatives, shall have access to any documents, papers, or other records of the Contractor which are pertinent to the TxCDBG award, in order to make audits, examinations, excerpts, and transcripts and to closeout the City's/County's TxCDBG contract with TDA.	2 CFR 200.336 (former 24 CFR 85.36(i)(10))
None	Grantees or subgrantees must retain all required records for three years after grantees or subgrantees make final payments and all other pending matters are closed.	2 CFR 200.333 (former 24 CFR (85.36(i)(11))

(This page is intentionally left blank)

Temporary Project Signage

All TxCDBG construction projects utilizing TxCDBG funding must have temporary signage erected in a prominent location at the construction project site or along a major thoroughfare within the community as directed by the owner. A photo of this signage must be submitted to TDA prior to the release of construction funds.

Requirements of temporary signage include:

- placement in a prominent visible public area that is not blocked or obscured;
- construction of durable materials;
- minimum size of 11" x 17" with lettering no smaller than 1/2";
- Required text (or similar)*:

> "This project is funded by the Texas Department of Agriculture with funds allocated by the U.S. Department of Housing and Urban Development through the Community Development Block Grant Program."

Temporary signage may be reused for future TxCDBG projects as appropriate.

GrantWorks can provide a temporary sign meeting the minimum requirements at the pre-construction conference, upon request.

Projects Requiring Permanent Signage

Permanent signage identifying the location as a TxCDBG-funded project is required for any TxCDBG funded public buildings, park areas, or other structures open to the public, in addition to commercial facilities funded through the TCF Real Estate program. Some examples of projects requiring permanent signage include community centers, parks/recreation facilities, fire stations, and significant improvements to existing facilities. Project signage is an eligible construction cost.

Requirements of permanent signage include:

- placement in a prominent visible public area that is not blocked or obscured;
- construction of permanent materials;
- minimum size of 12" x 18" with lettering no smaller than 1/2";
- Required text:

> "This project is funded by the Texas Department of Agriculture with funds allocated by the U.S. Department of Housing and Urban Development through the Community Development Block Grant Program."

Please include this requirement in your specifications and bid documents

Recommended additional condition - Payment under this contract must be processed through the Texas Department of Agriculture - Office of Rural Affairs. Receipt of payment from the Grant Recipient will take at least 45 to 60 days from the time of pay estimate approval by the project engineer.

(e) The names, addresses and trade classifications of all other building construction contractors in which the undersigned has a substantial interest are:

NAME	ADDRESS	TRADE CLASSIFICATION

(Contractor)

Date 04/09/2021

By Mark Patterson

U.S. DEPARTMENT OF HOUSING AND URBAN DEVELOPMENT
COMMUNITY DEVELOPMENT BLOCK GRANT PROGRAM
CONTRACTOR'S CERTIFICATION

CONCERNING LABOR STANDARDS AND PREVAILING WAGE REQUIREMENTS

TO (appropriate recipient)	DATE 04/09/2021
	PROJECT NUMBER (if any) TXCDBG7218250
C/O	PROJECT NAME Waterline Improvement Project FM4 + CR1121

1. The undersigned, having executed a contract with Johnson County Special Utility District _____ for the construction of the above-identified project, acknowledges that:

   (a) The Labor Standards provisions are included in the aforesaid contract,

   (b) Correction of any infractions of the aforesaid conditions, including infractions by any subcontractors and any lower tier subcontractors, is Contractor's responsibility.

2. Certifies that:

   (a) Neither Contractor nor any firm, partnership or association in which it has substantial interest is designated as an ineligible contractor by the Comptroller General of the United States pursuant to Section 5.6(b) of the Regulations of the Secretary of Labor, Part 5 (29 CFR, Part 5) or pursuant to Section 3(a) of the Davis-Bacon Act, as amended.

   (b) No part of the aforementioned contract has been or will be subcontracted to any subcontractor if such subcontractor or any firm, corporation, partnership or association in which such subcontractor has a substantial interest is designated as an ineligible contractor pursuant to any of the aforementioned regulatory or statutory provisions.

3. Contractor agrees to obtain and forward to the aforementioned recipient within ten days after the execution of any subcontract, including those executed by subcontractors and any lower tier subcontractors, a Subcontractor's Certification Concerning Labor Standards and Prevailing Wage Requirements executed by the subcontractors.

4. Certifies that:

   (a) The legal name and the business address of the undersigned are:
   Patterson Professional Services, LLC
   P.O. Box 910, Collinsville, TX 76233

   (b) The undersigned is (choose one):

(1) A SINGLE PROPRIETORSHIP	(3) A CORPORATION ORGANIZED IN THE STATE OF Texas
(2) A PARTNERSHIP	(4) OTHER ORGANIZATION (Describe)

   (c) The name, title and address of the owner, partners or officers of the undersigned are:

NAME	TITLE	ADDRESS
Mark Patterson	President	304 Hogtown Rd Collinsville, TX 76233
David Patterson	Secretary / Treasurer	2204 Graham Grove Rd Collinsville, TX 76233

   (d) The names and addresses of all other persons having a substantial interest in the undersigned, and the nature of the interest are:

NAME	ADDRESS	NATURE OF INTEREST

(This page is intentionally left blank)

(d) The application shall include a description of the proposed deduction, the purpose to be served thereby, and the classes of laborers or mechanics from whose wages the proposed deduction would be made.

(e) The application shall state the name and business of any third person to whom any funds obtained from the proposed deductions are to be transmitted and the affiliation of such person, if any, with the applicant.

[29 FR 97, Jan. 4, 1964, as amended at 36 FR 9771, May 28, 1971]

§3.8 Action by the Secretary of Labor upon applications.

The Secretary of Labor shall decide whether or not the requested deduction is permissible under provisions of §3.6; and shall notify the applicant in writing of his decision.

§3.9 Prohibited payroll deductions.

Deductions not elsewhere provided for by this part and which are not found to be permissible under §3.6 are prohibited.

§3.10 Methods of payment of wages.

The payment of wages shall be by cash, negotiable instruments payable on demand, or the additional forms of compensation for which deductions are permissible under this part. No other methods of payment shall be recognized on work subject to the Copeland Act.

§3.11 Regulations part of contract.

All contracts made with respect to the construction, prosecution, completion, or repair of any public building or public work or building or work financed in whole or in part by loans or grants from the United States covered by the regulations in this part shall expressly bind the contractor or subcontractor to comply with such of the regulations in this part as may be applicable. In this regard, see §5.5(a) of this subtitle.

(h) Any deduction voluntarily authorized by the employee for the making of contributions to Community Chests, United Givers Funds, and similar charitable organizations.

(i) Any deductions to pay regular union initiation fees and membership dues, not including fines or special assessments: *Provided, however,* that a collective bargaining agreement between the contractor or subcontractor and representatives of its employees provides for such deductions and the deductions are not otherwise prohibited by law.

(j) Any deduction not more than for the "reasonable cost" of board, lodging, or other facilities meeting the requirements of section 3(m) of the Fair Labor Standards Act of 1938, as amended, and part 531 of this title. When such a deduction is made the additional records required under §516.25(a) of this title shall be kept.

(k) Any deduction for the cost of safety equipment of nominal value purchased by the employee as his own property for his personal protection in his work, such as safety shoes, safety glasses, safety gloves, and hard hats, if such equipment is not required by law to be furnished by the employer, if such deduction is not violative of the Fair Labor Standards Act or prohibited by other law, if the cost on which the deduction is based does not exceed the actual cost to the employer where the equipment is purchased from him and does not include any direct or indirect monetary return to the employer where the equipment is purchased from a third person, and if the deduction is either

(1) Voluntarily consented to by the employee in writing and in advance of the period in which the work is to be done and such consent is not a condition either for the obtaining of employment or its continuance; or

(2) Provided for in a bona fide collective bargaining agreement between the contractor or subcontractor and representatives of its employees.

[29 FR 97, Jan. 4, 1964, as amended at 36 FR 9770, May 28, 1971]

§3.6 Payroll deductions permissible with the approval of the Secretary of Labor.

Any contractor or subcontractor may apply to the Secretary of Labor for permission to make any deduction not permitted under §3.5. The Secretary may grant permission whenever he finds that:

(a) The contractor, subcontractor, or any affiliated person does not make a profit or benefit directly or indirectly from the deduction either in the form of a commission, dividend, or otherwise;

(b) The deduction is not otherwise prohibited by law;

(c) The deduction is either (1) voluntarily consented to by the employee in writing and in advance of the period in which the work is to be done and such consent is not a condition either for the obtaining of employment or its continuance, or (2) provided for in a bona fide collective bargaining agreement between the contractor or subcontractor and representatives of its employees; and

(d) The deduction serves the convenience and interest of the employee.

§3.7 Applications for the approval of the Secretary of Labor.

Any application for the making of payroll deductions under §3.6 shall comply with the requirements prescribed in the following paragraphs of this section:

(a) The application shall be in writing and shall be addressed to the Secretary of Labor.

(b) The application need not identify the contract or contracts under which the work in question is to be performed. Permission will be given for deductions on all current and future contracts of the applicant for a period of 1 year. A renewal of permission to make such payroll deduction will be granted upon the submission of an application which makes reference to the original application, recites the date of the Secretary of Labor's approval of such deductions, states affirmatively that there is continued compliance with the standards set forth in the provisions of §3.6, and specifies any conditions which have changed in regard to the payroll deductions.

(c) The application shall state affirmatively that there is compliance with the standards set forth in the provisions of §3.6. The affirmation shall be accompanied by a full statement of the facts indicating such compliance.

(b) Each contractor or subcontractor shall preserve his weekly payroll records for a period of three years from date of completion of the contract. The payroll records shall set out accurately and completely the name and address of each laborer and mechanic, his correct classification, rate of pay, daily and weekly number of hours worked, deductions made, and actual wages paid. Such payroll records shall be made available at all times for inspection by the contracting officer or his authorized representative, and by authorized representatives of the Department of Labor.

(Reporting and recordkeeping requirements in paragraph (b) have been approved by the Office of Management and Budget under control number 1215-0017)

[29 FR 97, Jan. 4, 1964, as amended at 47 FR 145, Jan. 5, 1982]

§3.5 Payroll deductions permissible without application to or approval of the Secretary of Labor.

Deductions made under the circumstances or in the situations described in the paragraphs of this section may be made without application to and approval of the Secretary of Labor:

(a) Any deduction made in compliance with the requirements of Federal, State, or local law, such as Federal or State withholding income taxes and Federal social security taxes.

(b) Any deduction of sums previously paid to the employee as a bona fide prepayment of wages when such prepayment is made without discount or interest. A *bona fide prepayment of wages* is considered to have been made only when cash or its equivalent has been advanced to the person employed in such manner as to give him complete freedom of disposition of the advanced funds.

(c) Any deduction of amounts required by court process to be paid to another, unless the deduction is in favor of the contractor, subcontractor, or any affiliated person, or when collusion or collaboration exists.

(d) Any deduction constituting a contribution on behalf of the person employed to funds established by the employer or representatives of employees, or both, for the purpose of providing either from principal or income, or both, medical or hospital care, pensions or annuities on retirement, death benefits, compensation for injuries, illness, accidents, sickness, or disability, or for insurance to provide any of the foregoing, or unemployment benefits, vacation pay, savings accounts, or similar payments for the benefit of employees, their families and dependents: *Provided, however,* That the following standards are met:

(1) The deduction is not otherwise prohibited by law;

(2) It is either:

(i) Voluntarily consented to by the employee in writing and in advance of the period in which the work is to be done and such consent is not a condition either for the obtaining of or for the continuation of employment, or

(ii) provided for in a bona fide collective bargaining agreement between the contractor or subcontractor and representatives of its employees;

(3) No profit or other benefit is otherwise obtained, directly or indirectly, by the contractor or subcontractor or any affiliated person in the form of commission, dividend, or otherwise; and

(4) The deductions shall serve the convenience and interest of the employee.

(e) Any deduction contributing toward the purchase of United States Defense Stamps and Bonds when voluntarily authorized by the employee.

(f) Any deduction requested by the employee to enable him to repay loans to or to purchase shares in credit unions organized and operated in accordance with Federal and State credit union statutes.

(g) Any deduction voluntarily authorized by the employee for the making of contributions to governmental or quasi-governmental agencies, such as the American Red Cross.

subcontractor, and the manufacturing or furnishing of materials, articles, supplies, or equipment on the site of the building or work, by persons employed at the site by the contractor or subcontractor.

(c) The terms *public building* or *public work* include building or work for whose construction, prosecution, completion, or repair, as defined above, a Federal agency is a contracting party, regardless of whether title thereof is in a Federal agency.

(d) The term *building or work financed in whole or in part by loans or grants from the United States* includes building or work for whose construction, prosecution, completion, or repair, as defined above, payment or part payment is made directly or indirectly from funds provided by loans or grants by a Federal agency. The term includes building or work for which the Federal assistance granted is in the form of loan guarantees or insurance.

(e) Every person paid by a contractor or subcontractor in any manner for his labor in the construction, prosecution, completion, or repair of a public building or public work or building or work financed in whole or in part by loans or grants from the United States is *employed* and receiving *wages,* regardless of any contractual relationship alleged to exist between him and the real employer.

(f) The term *any affiliated person* includes a spouse, child, parent, or other close relative of the contractor or subcontractor; a partner or officer of the contractor or subcontractor; a corporation closely connected with the contractor or subcontractor as parent, subsidiary, or otherwise, and an officer or agent of such corporation.

(g) The term *Federal agency* means the United States, the District of Columbia, and all executive departments, independent establishments, administrative agencies, and instrumentalities of the United States and of the District of Columbia, including corporations, all or substantially all of the stock of which is beneficially owned by the United States, by the District of Columbia, or any of the foregoing departments, establishments, agencies, and instrumentalities.

[29 FR 97, Jan. 4, 1964, as amended at 38 FR 32575, Nov. 27, 1973]

§3.3 Weekly statement with respect to payment of wages.

(a) As used in this section, the term *employee* shall not apply to persons in classifications higher than that of laborer or mechanic and those who are the immediate supervisors of such employees.

(b) Each contractor or subcontractor engaged in the construction, prosecution, completion, or repair of any public building or public work, or building or work financed in whole or in part by loans or grants from the United States, shall furnish each week a statement with respect to the wages paid each of its employees engaged on work covered by this part 3 and part 5 of this title during the preceding weekly payroll period. This statement shall be executed by the contractor or subcontractor or by an authorized officer or employee of the contractor or subcontractor who supervises the payment of wages, and shall be on the back of Form WH 347, "Payroll (For Contractors Optional Use)" or on any form with identical wording. Copies of Form WH 347 may be obtained from the Government contracting or sponsoring agency or from the Wage and Hour Division Web site at *http://www.dol.gov/esa/whd/forms/wh347instr.htm* or its successor site.

(c) The requirements of this section shall not apply to any contract of $2,000 or less.

(d) Upon a written finding by the head of a Federal agency, the Secretary of Labor may provide reasonable limitations, variations, tolerances, and exemptions from the requirements of this section subject to such conditions as the Secretary of Labor may specify.

[29 FR 97, Jan. 4, 1964, as amended at 33 FR 10186, July 17, 1968; 47 FR 23679, May 28, 1982; 73 FR 77511, Dec. 19, 2008]

§3.4 Submission of weekly statements and the preservation and inspection of weekly payroll records.

(a) Each weekly statement required under §3.3 shall be delivered by the contractor or subcontractor, within seven days after the regular payment date of the payroll period, to a representative of a Federal or State agency in charge at the site of the building or work, or, if there is no representative of a Federal or State agency at the site of the building or work, the statement shall be mailed by the contractor or subcontractor, within such time, to a Federal or State agency contracting for or financing the building or work. After such examination and check as may be made, such statement, or a copy thereof, shall be kept available, or shall be transmitted together with a report of any violation, in accordance with applicable procedures prescribed by the United States Department of Labor.

PART 3—CONTRACTORS AND SUBCONTRACTORS ON PUBLIC BUILDING OR PUBLIC WORK FINANCED IN WHOLE OR IN PART BY LOANS OR GRANTS FROM THE UNITED STATES

Contents

AUTHORITY: R.S. 161, sec. 2, 48 Stat. 848; Reorg. Plan No. 14 of 1950, 64 Stat. 1267; 5 U.S.C. 301; 40 U.S.C. 3145; Secretary's Order 01-2008; and Employment Standards Order No. 2001-01.

SOURCE: 29 FR 97, Jan. 4, 1964, unless otherwise noted.

§3.1 Purpose and scope.

This part prescribes "anti-kickback" regulations under section 2 of the Act of June 13, 1934, as amended (40 U.S.C. 276c), popularly known as the Copeland Act. This part applies to any contract which is subject to Federal wage standards and which is for the construction, prosecution, completion, or repair of public buildings, public works or buildings or works financed in whole or in part by loans or grants from the United States. The part is intended to aid in the enforcement of the minimum wage provisions of the Davis-Bacon Act and the various statutes dealing with federally assisted construction that contain similar minimum wage provisions, including those provisions which are not subject to Reorganization Plan No. 14 (e.g., the College Housing Act of 1950, the Federal Water Pollution Control Act, and the Housing Act of 1959), and in the enforcement of the overtime provisions of the Contract Work Hours Standards Act whenever they are applicable to construction work. The part details the obligation of contractors and subcontractors relative to the weekly submission of statements regarding the wages paid on work covered thereby; sets forth the circumstances and procedures governing the making of payroll deductions from the wages of those employed on such work; and delineates the methods of payment permissible on such work.

§3.2 Definitions.

As used in the regulations in this part:

(a) The terms *building* or *work* generally include construction activity as distinguished from manufacturing, furnishing of materials, or servicing and maintenance work. The terms include, without limitation, buildings, structures, and improvements of all types, such as bridges, dams, plants, highways, parkways, streets, subways, tunnels, sewers, mains, powerlines, pumping stations, railways, airports, terminals, docks, piers, wharves, ways, lighthouses, buoys, jetties, breakwaters, levees, and canals; dredging, shoring, scaffolding, drilling, blasting, excavating, clearing, and landscaping. Unless conducted in connection with and at the site of such a building or work as is described in the foregoing sentence, the manufacture or furnishing of materials, articles, supplies, or equipment (whether or not a Federal or State agency acquires title to such materials, articles, supplies, or equipment during the course of the manufacture or furnishing, or owns the materials from which they are manufactured or furnished) is not a *building* or *work* within the meaning of the regulations in this part.

(b) The terms *construction, prosecution, completion,* or *repair* mean all types of work done on a particular building or work at the site thereof, including, without limitation, altering, remodeling, painting and decorating, the transporting of materials and supplies to or from the building or work by the employees of the construction contractor or construction

(3) Withholding for unpaid wages and liquidated damages. HUD or its designee shall upon its own action or upon written request of an authorized representative of the Department of Labor withhold or cause to be withheld, from any moneys payable on account of work performed by the contractor or subcontractor under any such contract or any other Federal contract with the same prime contract, or any other Federally-assisted contract subject to the Contract Work Hours and Safety Standards Act which is held by the same prime contractor such sums as may be determined to be necessary to satisfy any liabilities of such contractor or subcontractor for unpaid wages and liquidated damages as provided in the clause set forth in subparagraph (2) of this paragraph.

(4) Subcontracts. The contractor or subcontractor shall insert in any subcontracts the clauses set forth in subparagraph (1) through (4) of this paragraph and also a clause requiring the subcontractors to include these clauses in any lower tier subcontracts. The prime contractor shall be responsible for compliance by any subcontractor or lower tier subcontractor with the clauses set forth in subparagraphs (1) through (4) of this paragraph.

C. Health and Safety. The provisions of this paragraph C are applicable where the amount of the prime contract exceeds $100,000.

(1) No laborer or mechanic shall be required to work in surroundings or under working conditions which are unsanitary, hazardous, or dangerous to his health and safety as determined under construction safety and health standards promulgated by the Secretary of Labor by regulation.

(2) The Contractor shall comply with all regulations issued by the Secretary of Labor pursuant to Title 29 Part 1926 and failure to comply may result in imposition of sanctions pursuant to the Contract Work Hours and Safety Standards Act, (Public Law 91-54, 83 Stat 96). 40 USC 3701 et seq.

(3) The contractor shall include the provisions of this paragraph in every subcontract so that such provisions will be binding on each subcontractor. The contractor shall take such action with respect to any subcontractor as the Secretary of Housing and Urban Development or the Secretary of Labor shall direct as a means of enforcing such provisions.

the Employment and Training Administration shall be paid not less than the applicable wage rate on the wage determination for the work actually performed. In addition, any trainee performing work on the job site in excess of the ratio permitted under the registered program shall be paid not less than the applicable wage rate on the wage determination for the work actually performed. In the event the Employment and Training Administration withdraws approval of a training program, the contractor will no longer be permitted to utilize trainees at less than the applicable predetermined rate for the work performed until an acceptable program is approved.

(iii) Equal employment opportunity. The utilization of apprentices, trainees and journeymen under 29 CFR Part 5 shall be in conformity with the equal employment opportunity requirements of Executive Order 11246, as amended, and 29 CFR Part 30.

5. Compliance with Copeland Act requirements. The contractor shall comply with the requirements of 29 CFR Part 3 which are incorporated by reference in this contract

6. Subcontracts. The contractor or subcontractor will insert in any subcontracts the clauses contained in subparagraphs 1 through 11 in this paragraph A and such other clauses as HUD or its designee may by appropriate instructions require, and a copy of the applicable prevailing wage decision, and also a clause requiring the subcontractors to include these clauses in any lower tier subcontracts. The prime contractor shall be responsible for the compliance by any subcontractor or lower tier subcontractor with all the contract clauses in this paragraph.

7. Contract termination; debarment. A breach of the contract clauses in 29 CFR 5.5 may be grounds for termination of the contract and for debarment as a contractor and a subcontractor as provided in 29 CFR 5.12.

8. Compliance with Davis-Bacon and Related Act Requirements. All rulings and interpretations of the Davis-Bacon and Related Acts contained in 29 CFR Parts 1, 3, and 5 are herein incorporated by reference in this contract

9. Disputes concerning labor standards. Disputes arising out of the labor standards provisions of this contract shall not be subject to the general disputes clause of this contract. Such disputes shall be resolved in accordance with the procedures of the Department of Labor set forth in 29 CFR Parts 5, 6, and 7. Disputes within the meaning of this clause include disputes between the contractor (or any of its subcontractors) and HUD or its designee, the U.S. Department of Labor, or the employees or their representatives.

10. (i) Certification of Eligibility. By entering into this contract the contractor certifies that neither it (nor he or she) nor any person or firm who has an interest in the contractor's firm is a person or firm ineligible to be awarded Government contracts by virtue of Section 3(a) of the Davis-Bacon Act or 29 CFR 5.12(a)(1) or to be awarded HUD contracts or participate in HUD programs pursuant to 24 CFR Part 24.

(ii) No part of this contract shall be subcontracted to any person or firm ineligible for award of a Government contract by virtue of Section 3(a) of the Davis-Bacon Act or 29 CFR 5.12(a)(1) or to be awarded HUD contracts or participate in HUD programs pursuant to 24 CFR Part 24.

(iii) The penalty for making false statements is prescribed in the U.S. Criminal Code, 18 U.S.C. 1001. Additionally, U.S. Criminal Code, Section 1 01 0, Title 18, U.S.C., "Federal Housing Administration transactions", provides in part: "Whoever, for the purpose of . . . influencing in any way the action of such Administration ..... makes, utters or publishes any statement knowing the same to be false ..... shall be fined not more than $5,000 or imprisoned not more than two years, or both."

11. Complaints, Proceedings, or Testimony by Employees. No laborer or mechanic to whom the wage, salary, or other labor standards provisions of this Contract are applicable shall be discharged or in any other manner discriminated against by the Contractor or any subcontractor because such employee has filed any complaint or instituted or caused to be instituted any proceeding or has testified or is about to testify in any proceeding under or relating to the labor standards applicable under this Contract to his employer.

B. Contract Work Hours and Safety Standards Act. The provisions of this paragraph B are applicable where the amount of the prime contract exceeds $100,000. As used in this paragraph, the terms "laborers" and "mechanics" include watchmen and guards.

(1) Overtime requirements. No contractor or subcontractor contracting for any part of the contract work which may require or involve the employment of laborers or mechanics shall require or permit any such laborer or mechanic in any workweek in which the individual is employed on such work to work in excess of 40 hours in such workweek unless such laborer or mechanic receives compensation at a rate not less than one and one-half times the basic rate of pay for all hours worked in excess of 40 hours in such workweek.

(2) Violation; liability for unpaid wages; liquidated damages. In the event of any violation of the clause set forth in subparagraph (1) of this paragraph, the contractor and any subcontractor responsible therefor shall be liable for the unpaid wages. In addition, such contractor and subcontractor shall be liable to the United States (in the case of work done under contract for the District of Columbia or a territory, to such District or to such territory), for liquidated damages. Such liquidated damages shall be computed with respect to each individual laborer or mechanic, including watchmen and guards, employed in violation of the clause set forth in subparagraph (1) of this paragraph, in the sum of $25 for each calendar day on which such individual was required or permitted to work in excess of the standard workweek of 40 hours without payment of the overtime wages required by the clause set forth in sub paragraph (1) of this paragraph.

$27/day as of 1/24/19

(2) That each laborer or mechanic (including each helper, apprentice, and trainee) employed on the contract during the payroll period has been paid the full weekly wages earned, without rebate, either directly or indirectly, and that no deductions have been made either directly or indirectly from the full wages earned, other than permissible deductions as set forth in 29 CFR Part 3;

(3) That each laborer or mechanic has been paid not less than the applicable wage rates and fringe benefits or cash equivalents for the classification of work performed, as specified in the applicable wage determination incorporated into the contract.

(c) The weekly submission of a properly executed certification set forth on the reverse side of Optional Form WH-347 shall satisfy the requirement for submission of the "Statement of Compliance" required by subparagraph A. 3. (ii)(b).

(d) The falsification of any of the above certifications may subject the contractor or subcontractor to civil or criminal prosecution under Section 1001 of Title 18 and Section 231 of Title 31 of the United States Code.

(iii) The contractor or subcontractor shall make the records required under subparagraph A.3.(i) available for inspection, copying, or transcription by authorized representatives of HUD or its designee or the Department of Labor, and shall permit such representatives to interview employees during working hours on the job. If the contractor or subcontractor fails to submit the required records or to make them available, HUD or its designee may, after written notice to the contractor, sponsor, applicant or owner, take such action as may be necessary to cause the suspension of any further payment, advance, or guarantee of funds. Furthermore, failure to submit the required records upon request or to make such records available may be grounds for debarment action pursuant to 29 CFR 5.12.

4. Apprentices and Trainees.

(i) Apprentices. Apprentices will be permitted to work at less than the predetermined rate for the work they performed when they are employed pursuant to and individually registered in a bona fide apprenticeship program registered with the U.S. Department of Labor, Employment and Training Administration, Office of Apprenticeship Training, Employer and Labor Services, or with a State Apprenticeship Agency recognized by the Office, or if a person is employed in his or her first 90 days of probationary employment as an apprentice in such an apprenticeship program, who is not individually registered in the program, but who has been certified by the Office of Apprenticeship Training, Employer and Labor Services or a State Apprenticeship Agency (where appropriate) to be eligible for probationary employment as an apprentice. The allowable ratio of apprentices to journeymen on the job site in any craft classification shall not be greater than the ratio permitted to the contractor as to the entire work force under the registered program. Any worker listed on a payroll at an apprentice wage rate, who is not registered or otherwise employed as stated above, shall be paid not less than the applicable wage rate on the wage determination for the classification of work actually performed. In addition, any apprentice performing work on the job site in excess of the ratio permitted under the registered program shall be paid not less than the applicable wage rate on the wage determination for the work actually performed. Where a contractor is performing construction on a project in a locality other than that in which its program is registered, the ratios and wage rates (expressed in percentages of the journeyman's hourly rate) specified in the contractor's or subcontractor's registered program shall be observed. Every apprentice must be paid at not less than the rate specified in the registered program for the apprentice's level of progress, expressed as a percentage of the journeymen hourly rate specified in the applicable wage determination. Apprentices shall be paid fringe benefits in accordance with the provisions of the apprenticeship program. If the apprenticeship program does not specify fringe benefits, apprentices must be paid the full amount of fringe benefits listed on the wage determination for the applicable classification. If the Administrator determines that a different practice prevails for the applicable apprentice classification, fringes shall be paid in accordance with that determination. In the event the Office of Apprenticeship Training, Employer and Labor Services, or a State Apprenticeship Agency recognized by the Office, withdraws approval of an apprenticeship program, the contractor will no longer be permitted to utilize apprentices at less than the applicable predetermined rate for the work performed until an acceptable program is approved.

(ii) Trainees. Except as provided in 29 CFR 5.16, trainees will not be permitted to work at less than the predetermined rate for the work performed unless they are employed pursuant ',to and individually registered in a program which has received prior approval, evidenced by formal certification by the U.S. Department of Labor, Employment and Training Administration. The ratio of trainees to journeymen on the job site shall not be greater than permitted under the plan approved by the Employment and Training Administration. Every trainee must be paid at not less than the rate specified in the approved program for the trainee's level of progress, expressed as a percentage of the journeyman hourly rate specified in the applicable wage determination. Trainees shall be paid fringe benefits in accordance with the provisions of the trainee program. If the trainee program does not mention fringe benefits, trainees shall be paid the full amount of fringe benefits listed on the wage determination unless the Administrator of the Wage and Hour Division determines that there is an apprenticeship program associated with the corresponding journeyman wage rate on the wage determination which provides for less than full fringe benefits for apprentices. Any employee listed on the payroll at a trainee rate who is not registered and participating in a training plan approved by

of the wages of any laborer or mechanic the amount of any costs reasonably anticipated in providing bona fide fringe benefits under a plan or program, Provided, That the Secretary of Labor has found, upon the written request of the contractor, that the applicable standards of the Davis-Bacon Act have been met. The Secretary of Labor may require the contractor to set aside in a separate account assets for the meeting of obligations under the plan or program. (Approved by the Office of Management and Budget under OMB Control Number 1215-0140.)

2. **Withholding.** HUD or its designee shall upon its own action or upon written request of an authorized representative of the Department of Labor withhold or cause to be withheld from the contractor under this contract or any other Federal contract with the same prime contractor, or any other Federally-assisted contract subject to Davis-Bacon prevailing wage requirements, which is held by the same prime contractor so much of the accrued payments or advances as may be considered necessary to pay laborers and mechanics, including apprentices, trainees and helpers, employed by the contractor or any subcontractor the full amount of wages required by the contract in the event of failure to pay any laborer or mechanic, including any apprentice, trainee or helper, employed or working on the site of the work, all or part of the wages required by the contract, HUD or its designee may, after written notice to the contractor, sponsor, applicant, or owner, take such action as may be necessary to cause the suspension of any further payment, advance, or guarantee of funds until such violations have ceased. HUD or its designee may, after written notice to the contractor, disburse such amounts withheld for and on account of the contractor or subcontractor to the respective employees to whom they are due. The Comptroller General shall make such disbursements in the case of direct Davis-Bacon Act contracts.

3. **(i) Payrolls and basic records.** Payrolls and basic records relating thereto shall be maintained by the contractor during the course of the work preserved for a period of three years thereafter for all laborers and mechanics working at the site of the work. Such records shall contain the name, address, and social security number of each such worker, his or her correct classification, hourly rates of wages paid (including rates of contributions or costs anticipated for bona fide fringe benefits or cash equivalents thereof of the types described in Section l(b)(2)(B) of the Davis-bacon Act), daily and weekly number of hours worked, deductions made and actual wages paid. Whenever the Secretary of Labor has found under 29 CFR 5.5 (a)(1)(iv) that the wages of any laborer or mechanic include the amount of any costs reasonably anticipated in providing benefits under a plan or program described in Section l(b)(2)(B) of the Davis-Bacon Act, the contractor shall maintain records which show that the commitment to provide such benefits is enforceable, that the plan or program is financially responsible, and that the plan or program has been communicated in writing to the laborers or mechanics affected, and records which show the costs anticipated or the actual cost incurred in providing such benefits. Contractors employing apprentices or trainees under approved programs shall maintain written evidence of the registration of apprenticeship programs and certification of trainee programs, the registration of the apprentices and trainees, and the ratios and wage rates prescribed in the applicable programs. (Approved by the Office of Management and Budget under OMB Control Numbers 1215-0140 and 1215-0017.)

(ii) (a) The contractor shall submit weekly for each week in which any contract work is performed a copy of all payrolls to HUD or its designee if the agency is a party to the contract, but if the agency is not such a party, the contractor will submit the payrolls to the applicant sponsor, or owner, as the case may be, for transmission to HUD or its designee. The payrolls submitted shall set out accurately and completely all of the information required to be maintained under 29 CFR 5.5(a)(3)(i) except that full social security numbers and home addresses shall not be included on weekly transmittals. Instead the payrolls shall only need to include an individually identifying number for each employee (e.g., the last four digits of the employee's social security number). The required weekly payroll information may be submitted in any form desired. Optional Form WH-347 is available for this purpose from the Wage and Hour Division Web site at *http://www.dol.gov/esa/whd/forms/wh347instr.htm* or its successor site. The prime contractor is responsible for the submission of copies of payrolls by all subcontractors. Contractors and subcontractors shall maintain the full social security number and current address of each covered worker, and shall provide them upon request to HUD or its designee if the agency is a party to the contract, but if the agency is not such a party, the contractor will submit the payrolls to the applicant sponsor, or owner, as the case may be, for transmission to HUD or its designee, the contractor, or the Wage and Hour Division of the Department of Labor for purposes of an investigation or audit of compliance with prevailing wage requirements. It is not a violation of this subparagraph for a prime contractor to require a subcontractor to provide addresses and social security numbers to the prime contractor for its own records, without weekly submission to HUD or its designee. (Approved by the Office of Management and Budget under OMB Control Number 1215-0149.)

(b) Each payroll submitted shall be accompanied by a "Statement of Compliance," signed by the contractor or subcontractor or his or her agent who pays or supervises the payment of the persons employed under the contract and shall certify the following:

(1) That the payroll for the payroll period contains the information required to be provided under 29 CFR 5.5 (a)(3)(ii), the appropriate information is being maintained under 29 CFR 5.5(a)(3)(i), and that such information is correct and complete;

Applicability

The Project or Program to which the construction work covered by this contract pertains is being assisted by the United States of America and the following Federal Labor Standards Provisions are included in this Contract pursuant to the provisions applicable to such Federal assistance.

A. 1. (i) **Minimum Wages.** All laborers and mechanics employed or working upon the site of the work, will be paid unconditionally and not less often than once a week, and without subsequent deduction or rebate on any account (except such payroll deductions as are permitted by regulations issued by the Secretary of Labor under the Copeland Act (29 CFR Part 3), the full amount of wages and bona fide fringe benefits (or cash equivalents thereof) due at time of payment computed at rates not less than those contained in the wage determination of the Secretary of Labor which is attached hereto and made a part hereof, regardless of any contractual relationship which may be alleged to exist between the contractor and such laborers and mechanics. Contributions made or costs reasonably anticipated for bona fide fringe benefits under Section l(b)(2) of the Davis-Bacon Act on behalf of laborers or mechanics are considered wages paid to such laborers or mechanics, subject to the provisions of 29 CFR 5.5(a)(1)(iv); also, regular contributions made or costs incurred for more than a weekly period (but not less often than quarterly) under plans, funds, or programs, which cover the particular weekly period, are deemed to be constructively made or incurred during such weekly period.

Such laborers and mechanics shall be paid the appropriate wage rate and fringe benefits on the wage determination for the classification of work actually performed, without regard to skill, except as provided in 29 CFR 5.5(a)(4). Laborers or mechanics performing work in more than one classification may be compensated at the rate specified for each classification for the time actually worked therein: Provided, That the employer's payroll records accurately set forth the time spent in each classification in which work is performed. The wage determination (including any additional classification and wage rates conformed under 29 CFR 5.5(a)(1)(ii) and the Davis-Bacon poster (WH-1321) shall be posted at all times by the contractor and its subcontractors at the site of the work in a prominent and accessible, place where it can be easily seen by the workers.

(ii) (a) Any class of laborers or mechanics which is not listed in the wage determination and which is to be employed under the contract shall be classified in conformance with the wage determination. HUD shall approve an additional classification and wage rate and fringe benefits therefor only when the following criteria have been met:

(1) The work to be performed by the classification requested is not performed by a classification in the wage determination; and

(2) The classification is utilized in the area by the construction industry; and

(3) The proposed wage rate, including any bona fide fringe benefits, bears a reasonable relationship to the wage rates contained in the wage determination.

(b) If the contractor and the laborers and mechanics to be employed in the classification (if known), or their representatives, and HUD or its designee agree on the classification and wage rate (including the amount designated for fringe benefits where appropriate), a report of the action taken shall be sent by HUD or its designee to the Administrator of the Wage and Hour Division, Employment Standards Administration, U.S. Department of Labor, Washington, D.C. 20210. The Administrator, or an authorized representative, will approve, modify, or disapprove every additional classification action within 30 days of receipt and so advise HUD or its designee or will notify HUD or its designee within the 30-day period that additional time is necessary. (Approved by the Office of Management and Budget under OMB control number 1215-0140.)

(c) In the event the contractor, the laborers or mechanics to be employed in the classification or their representatives, and HUD or its designee do not agree on the proposed classification and wage rate (including the amount designated for fringe benefits, where appropriate), HUD or its designee shall refer the questions, including the views of all interested parties and the recommendation of HUD or its designee, to the Administrator for determination. The Administrator, or an authorized representative, will issue a determination within 30 days of receipt and so advise HUD or its designee or will notify HUD or its designee within the 30-day period that additional time is necessary. (Approved by the Office of Management and Budget under OMB Control Number 1215-0140.)

(d) The wage rate (including fringe benefits where appropriate) determined pursuant to subparagraphs (1)(ii)(b) or (c) of this paragraph, shall be paid to all workers performing work in the classification under this contract from the first day on which work is performed in the classification.

(iii) Whenever the minimum wage rate prescribed in the contract for a class of laborers or mechanics includes a fringe benefit which is not expressed as an hourly rate, the contractor shall either pay the benefit as stated in the wage determination or shall pay another bona fide fringe benefit or an hourly cash equivalent thereof.

(iv) If the contractor does not make payments to a trustee or other third person, the contractor may consider as part

Non-MSA Counties of Atascosa, Bandera, Dimmit, Edwards, Frio, Gillespie, Gonzales, Jim Hogg, Karnes, Kendall, Kerr, Kinney, La Salle, McMullen, Maverick, Medina, Real, Uvalde, Val Verde, Wilson, Zapata & Zavala	49.4
Corpus Christi Area:	
Corpus Christi, Nueces Co. & San Patricio Co.	41.7
Non-MSA Counties of Aransas, Bee, Brooks, Duval, Jim Wells, Kenedy, Kleberg, Live Oak & Refugio	44.2
Brownsville, McAllen, Harlingen Area:	
Brownsville, Harlingen, San Benito & Cameron Co.	71.0
McAllen, Pharr, Edinburg & Hidalgo Co.	72.8
Non-MSA Counties of Starr & Willacy	72.9
Odessa, Midland Area:	
Midland & Midland Co.	19.1
Odessa & Ector Co.	15.1
Non-MSA Counties of Andrews, Crane, Glasscock, Howard, Loving, Martin, Pecos, Reeves, Upton, Ward & Winkler	18.9
El Paso Area:	
El Paso & El Paso Co.	57.8
Non-MSA Counties of Brewster, Culbertson, Hudspeth, Jeff Davis & Presidio	49.0
Lubbock Area:	
Lubbock & Lubbock Co.	19.6
Non-MSA Counties of Bailey, Borden, Cochran, Crosby, Dawson, Dickens, Floyd, Gaines, Garza, Hale, Hockley, King, Lamb, Lynn, Motley, Terry & Yoakum	19.5
Amarillo Area:	
Amarillo, Potter Co. & Randall Co.	9.3
Non-MSA Counties of Armstrong, Briscoe, Carson, Castro, Childress, Collingsworth, Dallam, Deaf Smith, Donley, Gray, Hall, Hansford, Hartley, Hemphill, Hutchinson, Lipscomb, Moore, Ochiltree, Oldham, Parmer, Roberts, Sherman, Swisher, & Wheeler	11.0

MINORITY/FEMALE GOALS AND TIMETABLES

The female employment goal is effective as of April 1980 and is currently 6.9%. The percentages for minority participation in Texas are:

Texarkana Area:	
Texarkana & Bowie Co.	19.7
Non-MSA Counties of Camp, Cass, Lamar, Morris, Red River & Titus	20.2
Tyler-Longview Area:	
Longview, Gregg Co. & Harrison Co.	22.8
Tyler & Smith Co.	23.5
Non-MSA Counties of Anderson, Angelina, Cherokee, Henderson, Marion, Nacogdoches, Panola, Rusk, San Augustine, Shelby, Upshur & Wood	22.5
Beaumont-Port Arthur Area:	
Beaumont, Port Arthur, Orange, Hardin Co., Jefferson Co., & Orange Co.	22.6
Non-MSA Counties of Jasper, Houston, Newton, Sabine, & Tyler	22.6
Houston Area:	
Bryan, College Station & Brazos Co.	23.7
Galveston, Texas City & Galveston Co.	28.9
Houston, Brazoria Co., Fort Bend Co., Harris Co., Liberty Co., Montgomery Co. & Waller Co.	27.3
Non-MSA Counties of Austin, Burleson, Calhoun, Chambers, Colorado, DeWitt, Fayette, Goliad, Grimes, Jackson, Lavaca, Leon, Madison, Matagorda, Polk, Robertson, San Jacinto, Trinity, Victoria, Walker, Washington, & Wharton	27.4
Austin Area:	
Austin, Hays Co., Travis Co., & Williamson Co.	24.1
Non-MSA Counties of Bastrop, Blanco, Burnet, Caldwell, Lee & Llano	24.2
Waco, Killeen, Temple Area:	
Killeen, Temple, Bell Co. & Coryell Co.	16.4
Waco & McLennan Co.	20.7
Non-MSA Counties of Bosque, Falls, Freestone, Hamilton, Hill, Lampasas, Limestone, Milam & Mills	18.6
Dallas, Fort Worth Area:	
Dallas, Fort Worth, Collin Co., Dallas Co., Denton Co., Ellis Co., Hood Co., Johnson Co., Kaufman Co., Parker Co., Rockwall Co., Tarrant Co. & Wise Co.	18.2
Sherman, Denison & Grayson Co.	9.4
Non-MSA Counties of Cooke, Delta, Erath, Fannin, Franklin, Hopkins, Hunt, Jack, Montague, Navarro, Palo Pinto, Rains, Somervell, & Van Zandt	17.2
Wichita Falls Area:	
Wichita Falls, Clay Co. & Wichita Co.	12.4
Non-MSA Counties of Archer, Baylor, Cottle, Foard, Hardeman, Wilbarger & Young	11.0
Abilene Area:	
Abilene, Callaghan Co., Jones Co. & Taylor Co.	11.6
Non-MSA Counties of Brown, Coleman, Comanche, Eastland, Fisher, Haskell, Kent, Knox, Mitchell, Nolan, Scurry, Shackleford, Stephens, Stonewall & Throckmorton	10.9
San Angelo Area:	
San Angelo & Tom Green Co.	19.2
Non-MSA Counties of Coke, Concho, Crockett, Irion, Kimble, McCullough, Mason, Menard, Reagan, Runnels, San Saba, Schleicher, Sterling, Sutton & Terrell	20.0
San Antonio Area:	
Laredo & Webb Co.	87.3
San Antonio, Bexar Co., Comal Co. & Guadalupe Co.	47.8

A1002

SECTION 3 POLICY

In accordance with 12 U.S.C. 1701u (Section 3), Johnson County agrees to implement the following steps, which, to the *greatest extent feasible*, will provide job training, employment and contracting opportunities for Section 3 residents and Section 3 businesses of the areas in which the program/project is being carried out.

A. Introduce and pass a resolution adopting this plan as a policy to strive to attain goals for compliance to Section 3 regulations by increasing opportunities for employment and contracting for Section 3 residents and businesses.

B. Assign duties related to implementation of this plan to the designated Civil Rights Officer.

C. Notify Section 3 residents and business concerns of potential new employment and contracting opportunities as they are triggered by TxCDBG grant awards through the use of: Public Hearings and related advertisements; public notices; bidding advertisements and bid documents; notification to local business organizations such as the Chamber(s) of Commerce or the Urban League; local advertising media including public signage; project area committees and citizen advisory boards; local HUD offices; regional planning agencies; and all other appropriate referral sources. Include Section 3 clauses in all covered solicitations and contracts.

D. Maintain a list of those businesses that have identified themselves as Section 3 businesses for utilization in TxCDBG funded procurements, notify those businesses of pending contractual opportunities, and make this list available for general Grant Recipient procurement needs.

E. Maintain a list of those persons who have identified themselves as Section 3 residents and contact those persons when hiring/training opportunities are available through either the Grant Recipient or contractors.

F. Require that all Prime contractors and subcontractors with contracts over $100,000 commit to this plan as part of their contract work. Monitor the contractors' performance with respect to meeting Section 3 requirements and require that they submit reports as may be required by HUD or TDA to the Grant Recipient.

G. Submit reports as required by HUD or TDA regarding contracting with Section 3 businesses and/or employment as they occur; and submit reports within 20 days of federal fiscal year end (by October 20) which identify and quantify Section 3 businesses and employees.

H. Maintain records, including copies of correspondence, memoranda, etc., which document all actions taken to comply with Section 3 regulations.

As officers and representatives of Johnson County, we the undersigned have read and fully agree to this plan, and become a party to the full implementation of this program.

Roger Harmon, County Judge

December 10, 2018
Date

11. **Are any measures taken to encourage promotions for minorities and women?**
    Yes, an annual evaluation should be conducted for all minority and female personnel to encourage these employees to seek higher positions.
12. **What efforts are taken to insure that personnel policies are in accordance with the EEO policy?**
    Personnel policies in regard to job practices, work assignments, etc. should be continually monitored to insure that the EEO policy is carried out.
13. **Can women be excluded from utilizing any facilities available to men?**
    No, all facilities and company activities are non-segregated except for bathrooms or changing facilities to ensure privacy.
14. **What efforts should be utilized to include minority and female contractors and suppliers?**
    Take affirmative steps to ensure that small, minority, and women owned businesses are included on all lists for contractors/service providers. Solicit these businesses when issuing RFPs and RFQs and soliciting construction bids. Divide project activities into small tasks to allow participation. Keep records of all offers to minority and female construction contractors.
15. **If a construction contractor participates in a business related association that does not comply with equal opportunity affirmative action standards, does that show his/her failure to comply?**
    No, the construction contractor is responsible for its own compliance.
16. **Can a construction contractor hire a subcontractor who has been debarred from government contracts pursuant to EEO?**
    No. The construction contractor must suspend, terminate or cancel its contract with any Subcontractor who is in violation of the EEO policy.
17. **What effort has been taken by the construction contractor to monitor all employment to insure the company EEO policy is being carried out?**
    The construction contractor must designate a responsible individual to keep accurate records of all employees that includes specific information required by the government.

A1001

Equal Opportunity Guidelines for Construction Contractors

Note: To be included in bid packet and distributed at the preconstruction conference (optional)

1. **What are the responsibilities of the offeror or bidder to ensure equal employment opportunity?**
   For contracts over $ 10,000, the offeror or bidder must comply with the "Equal Opportunity Clause" and the "Standard Federal Equal Opportunity Construction Contract Specifications."

2. **Are construction contractors required to ensure a legal working environment for all employees?**
   Yes, it is the construction contractor's responsibility to provide an environment free of harassment, intimidation, and coercion to all employees and to notify all foremen and supervisors to carry out this obligation, with specific attention to minority or female individuals.

3. **To alleviate developing separate facilities for men and women on all sites, can a construction contractor place all women employees on one site?**
   No, two or more women should be assigned to each site when possible.

4. **Are construction contractors required to make special outreach efforts to Section 3 or minority and female recruitment sources?**
   Yes, construction contractors must establish a current list of Section 3, minority and female recruitment sources. Notification of employment opportunities, including the availability of on-the-job training and apprenticeship programs, should be given to these sources. The efforts of the construction contractors should be kept in file.

5. **Should records be maintained on the number of Section 3 residents, minority and females applying for positions with construction contractors?**
   Yes, records must be maintained to include a current list of names, addresses and telephone numbers of all Section 3, minority and female applicants. The documentation should also include the results of the applications submitted.

6. **What happens if a woman or minority is sent to the union by the Contractor and is not referred back to the Contractor for employment?**
   If the unions impede the construction contractor's responsibility to provide equal employment opportunity, a written notice should be submitted to TDA.

7. **What efforts are made by construction contractors to create entry-level positions for Section 3 residents, women and minorities?**
   Construction contractors are required to develop on-the-job training programs, or participate in training programs, especially those funded by the Department of Labor, to create positions for Section 3 residents, women and minorities and to meet employment needs.

8. **Are any efforts made by the Contractor to publicize their Equal Employment Opportunity (EEO) policy?**
   Yes, the construction contractor is responsible for notifying unions and sources of training programs of their equal employment opportunity policy. Unions should be requested to cooperate in the effort of equal opportunity. The policy should be included in any appropriate manuals, or collective bargaining agreements. The construction contractor is encouraged to publicize the equal employment opportunity policy in the company newspaper and annual report. The Contractor is also responsible to include the EEO policy in all media advertisement.

9. **Are any in-service training programs provided for staff to update the EEO policy?**
   At least annually a review of the EEO policy and the affirmative action obligations are required of all personnel employees of a decision-making status. A record of the meeting including date, time, location, persons present, subject matter discussed, and disposition of the subject matter should be maintained.

10. **What recruitment efforts are made for Section 3 residents, minorities and women?**
    The construction contractor must notify both orally and in writing, Section 3, minority and female recruitment sources one month prior to the date of acceptance for apprenticeship or other training programs.

(This page is intentionally left blank)

TX – Community Development Block Grant Forms

(This page is intentionally left blank)

As required by Chapter 2271, Government Code, CONTRACTOR hereby verifies that it does not boycott Israel and will not boycott Israel through the term of this Agreement. For purposes of this verification, "boycott Israel" means refusing to deal with, terminating business activities with, or otherwise taking any action that is intended to penalize, inflict economic harm on, or limit commercial relations specifically with Israel, or with a person or entity doing business in Israel or in an Israeli-controlled territory, but does not include an action made for ordinary business purposes.

54. Foreign Terrorist Organizations.

Pursuant to Chapter 2252, Texas Government Code, [Company] represents and certifies that, at the time of execution of this Agreement neither [Company], nor any wholly owned subsidiary, majority-owned subsidiary, parent company or affiliate of the same (i) engages in business with Iran, Sudan, or any foreign terrorist organization as described in Chapters 806 or 807 of the Texas Government Code, or Subchapter F of Chapter 2252 of the Texas Government Code, or (ii) is a company listed by the Texas Comptroller of Public Accounts under Sections 806.051, 807.051, or 2252.153 of the Texas Government Code. The term "foreign terrorist organization" in this paragraph has the meaning assigned to such term in Section 2252.151 of the Texas Government Code.

(f) Noncompliance with HUD's regulations in 24 CFR part 135 may result in sanctions, termination of this Contract for default, and debarment or suspension from future HUD assisted contracts.

(g) With respect to work performed in connection with section 3 covered Indian housing assistance, section 7(b) of the Indian Self-Determination and Education Assistance Act (25 U.S.C. 450e) also applies to the work to be performed under this Contract. Section 7(b) requires that to the greatest extent feasible (i) preference and opportunities for training and employment shall be given to Indians, and (ii) preference in the award of contracts and subcontracts shall be given to Indian organizations and Indian-owned Economic Enterprises. Parties to this contract that are subject to the provisions of section 3 and section 7(b) agree to comply with section 3 to the maximum extent feasible, but not in derogation of compliance with section 7(b).

47. Contract Documents and Drawings

The County will furnish the Contractor without charge 1 copies of the Contract Documents, including Technical Specifications and Drawings. Additional copies requested by the Contractor will be furnished at cost.

48. Contract Period

The work to be performed under this contract shall commence within the time stipulated by the County in the Notice to Proceed, and shall be fully completed within 120 calendar days thereafter.

49. Liquidated Damages

Since the actual damages for any delay in completion of the work under this contract are impossible to determine, the Contractor and his Sureties shall be liable for and shall pay to the County the sum of Two Hundred Dollars ($200.00) as fixed, agreed and liquidated damages for each calendar day of delay from the above stipulated time for completion.

50. Gender Neutral - Gender References

When necessary, unless the context clearly requires otherwise, any gender-specific or gender-neutral term in this Contract (for example, he, she, it, etc.) is to be read as referring to any other gender or to no gender.

51. Patent Rights and Inventions

The Firm shall comply with the requirements and regulations pertaining to patent rights with respect to any discovery or invention which arises or is developed in the course of or under such contract. (2 CFR 200 Appendix II (f) and Rights to Inventions in 37 CFR Part 401).

Rights to Inventions Made Under a Contract or Agreement - If the Federal award meets the definition of "funding agreement" under 37 CFR §401.2 (a) and the Subrecipient wishes to enter into a contract with a small business firm or nonprofit organization regarding the substitution of parties, assignment or performance of experimental, developmental, or research work under that "funding agreement," the Subrecipient must comply with the requirements of 37 CFR Part 401, "Rights to Inventions Made by Nonprofit Organizations and Small Business Firms Under Government Grants, Contracts and Cooperative Agreements," and any implementing regulations issued by the awarding agency. (2 CFR 200 Appendix II (f), Rights to Inventions)

52. Energy Efficiency

The Contractor shall comply with the mandatory standards and policies relating to energy efficiency which are contained in the state energy conservation plan issued in compliance with the Energy Policy and Conservation Act (Pub. L. 94A 163, 89 Stat. 871). (24 CFR 85.36 (i) (13)).

53. Verification No Boycott Israel.

43. Section 504 Rehabilitation Act of 1973, as amended.

The Contractor agrees that no otherwise qualified individual with disabilities shall, solely by reason of his/her disability, be denied the benefits of, or be subjected to discrimination, including discrimination in employment, under any program or activity receiving federal financial assistance.

44. Age Discrimination Act of 1975.

The Contractor shall comply with the Age Discrimination Act of 1975 which provides that no person in the United States shall on the basis of age be excluded from participation in, be denied the benefits of, or be subjected to discrimination under any program or activity receiving federal financial assistance.

45. Non Segregated Facilities

The Contractor certifies that he does not and will not maintain or provide for his employees any segregated facilities at any of his establishments, and that he does not and will not permit his employees any segregated facilities at any of his establishments, or permit his employees to perform their services at any location, under his control, where segregated facilities are maintained. As used in this paragraph the term "segregated facilities" means any waiting rooms, work areas, rest rooms and washrooms, restaurants and other eating areas, time clocks, locker rooms and other storage or dressing areas, parking lots, drinking fountains, recreation or entertainment areas, transportation, and housing facilities provided for employees which are segregated by explicit directive or are in fact segregated on the basis of race, creed, color, or national origin, because of habit, local custom, or otherwise.

46.*[If this Contract is greater than $100,000]*Economic Opportunities for Section 3 Residents and Section 3 Business Concerns.

(a) The work to be performed under this Contract is subject to the requirements of section 3 of the Housing and Urban Development (HUD) Act of 1968, as amended, 12 U.S.C. 1701u (section 3). The purpose of section 3 is to ensure that employment and other economic opportunities generated by HUD assistance or HUD-assisted projects covered by section 3, shall, to the greatest extent feasible, be directed to low- and very low-income persons, particularly persons who are recipients of HUD assistance for housing.

(b) The parties to this Contract agree to comply with HUD's regulations in 24 CFR part 135, which implement section 3. As evidenced by their execution of this Contract, the parties to this Contract certify that they are under no contractual or other impediment that would prevent them from complying with the part 135 regulations.

(c) The Contractor agrees to send to each labor organization or representative of workers with which the Contractor has a collective bargaining agreement or other understanding, if any, a notice advising the labor organization or workers' representative of the Contractor's commitments under this section 3 clause, and will post copies of the notice in conspicuous places at the work site where both employees and applicants for training and employment positions can see the notice. The notice shall describe the section 3 preference, shall set forth minimum number and job titles subject to hire, availability of apprenticeship and training positions, the qualifications for each; and the name and location of the person(s) taking applications for each of the positions; and the anticipated date the work shall begin.

(d) The Contractor agrees to include this section 3 clause in every subcontract subject to compliance with regulations in 24 CFR part 135, and agrees to take appropriate action, as provided in an applicable provision of the subcontract or in this section 3 clause, upon a finding that the subcontractor is in violation of the regulations in 24 CFR part 135. The Contractor will not subcontract with any subcontractor where the Contractor has notice or knowledge that the subcontractor has been found in violation of the regulations in 24 CFR part 135.

(e) The Contractor will certify that any vacant employment positions, including training positions, that are filled (1) after the Contractor is selected but before the contract is executed, and (2) with persons other than those to whom the regulations of 24 CFR part 135 require employment opportunities to be directed, were not filled to circumvent the Contractor's obligations under 24 CFR part 135.

sex, sexual orientation, gender identity, or national origin. Such action shall include, but not be limited to the following: Employment, upgrading, demotion, or transfer; recruitment or recruitment advertising; layoff or termination; rates of pay or other forms of compensation; and selection for training, including apprenticeship. The Contractor agrees to post in conspicuous places, available to employees and applicants for employment, notices to be provided setting forth the provisions of this nondiscrimination clause.

(b.) The Contractor will, in all solicitations or advertisements for employees placed by or on behalf of the Contractor, state that all qualified applicants will receive considerations for employment without regard to race, color, religion, sex, sexual orientation, gender identity, or national origin.

(c.) The Contractor will not discourage or in any other manner discriminate against any employee or applicant for employment because such employee or applicant has inquired about, discussed, or disclosed the compensation of the employee or applicant or another employee or applicant. This provision shall not apply to instances in which an employee who has access to the compensation information of other employees or applicants as a part of such employee's essential job functions discloses the compensation of such other employees or applicants to individuals who do not otherwise have access to such information, unless such disclosure is in response to a formal complaint or charge, in furtherance of an investigation, proceeding, hearing, or action, including an investigation conducted by the employer, or is consistent with the contractor's legal duty to furnish information.

(d.) The Contractor will send to each labor union or representative of workers with which he has a collective bargaining agreement or other contract or understanding, a notice to be provided advising the said labor union or workers' representatives of the Contractor's commitments under this section, and shall post copies of the notice in conspicuous places available to employees and applicants for employment.

(e.) The Contractor will comply with all provisions of Executive Order 11246 of September 24, 1965, "Equal Employment Opportunity," and of the rules, regulations, and relevant orders of the Secretary of Labor.

(f.) The Contractor will furnish all information and reports required by Executive Order 11246 of September 24, 1965, and by rules, regulations, and orders of the Secretary of Labor, or pursuant thereto, and will permit access to his books, records, and accounts by the administering agency and the Secretary of Labor for purposes of investigation to ascertain compliance with such rules, regulations, and orders.

(g.) In the event of the Contractor's noncompliance with the nondiscrimination clauses of this contract or with any of the said rules, regulations, or orders, this contract may be canceled, terminated, or suspended in whole or in part and the Contractor may be declared ineligible for further Government contracts or federally assisted construction contracts in accordance with procedures authorized in Executive Order 11246 of September 24, 1965, and such other sanctions may be imposed and remedies invoked as provided in Executive Order 11246 of September 24, 1965, or by rule, regulation, or order of the Secretary of Labor, or as otherwise provided by law.

(h.) The Contractor will include the portion of the sentence immediately preceding paragraph (a) and the provisions of paragraphs (a) through (h) in every subcontract or purchase order unless exempted by rules, regulations, or orders of the Secretary of Labor issued pursuant to section 204 of Executive Order 11246 of September 24, 1965, so that such provisions will be binding upon each subcontractor or vendor. The Contractor will take such action with respect to any subcontract or purchase order as the administering agency may direct as a means of enforcing such provisions, including sanctions for noncompliance: Provided, however, That in the event a Contractor becomes involved in, or is threatened with, litigation with a subcontractor or vendor as a result of such direction by the administering agency the Contractor may request the United States to enter into such litigation to protect the interests of the United States.

43. Section 109 of the Housing and Community Development Act of 1974.

The Contractor shall comply with the provisions of Section 109 of the Housing and Community Development Act of 1974. No person in the United States shall on the ground of race, color, national origin, religion, or sex be excluded from participation in, be denied the benefits of, or be subjected to discrimination under any program or activity funded in whole or in part with funds made available under this title.

The Contractor certifies, by entering into this Contract, that neither it nor its principals are presently debarred, suspended, or otherwise excluded from or ineligible for participation in federally-assisted programs under Executive Orders 12549 (1986) and 12689 (1989). The term "principal" for purposes of this Contract is defined as an officer, director, owner, partner, key employee, or other person with primary management or supervisory responsibilities, or a person who has a critical influence on or substantive control over the operations of the Contractor. The Contractor understands that it must not make any award or permit any award (or contract) at any tier to any party which is debarred or suspended or is otherwise excluded from or ineligible for participation in Federal assistance programs under Executive Order 12549, "Debarment and Suspension."

39. [For Contracts that exceed $100,000] Byrd Anti-Lobbying

Contractor shall file the required certification: The undersigned certifies, to the best of his or her knowledge and belief, that:

(a) No Federal appropriated funds have been paid or will be paid, by or on behalf of the undersigned, to any person for influencing or attempting to influence an officer or employee of an agency, a Member of Congress, an officer or employee of Congress, or an employee of a Member of Congress in connection with the awarding of any Federal contract, the making of any Federal grant, the making of any Federal loan, the entering into of any cooperative agreement, and the extension, continuation, renewal, amendment, or modification of any Federal contract, grant, loan, or cooperative agreement.

(b) If any funds other than Federal appropriated funds have been paid or will be paid to any person for influencing or attempting to influence an officer or employee of any agency, a Member of Congress, an officer or employee of Congress, or an employee of a Member of Congress in connection with this Federal contract, grant, loan, or cooperative agreement, the undersigned shall complete and submit Standard Form-LLL, "Disclosure Form to Report Lobbying," in accordance with its instructions.

(c) The undersigned shall require that the language of this certification be included in the award documents for all subawards at all tiers (including subcontracts, subgrants, and contracts under grants, loans, and cooperative agreements) and that all subrecipients shall certify and disclose accordingly.

40. [For Contracts > $100K] Overtime Requirements

No Contractor or subcontractor contracting for any part of the Contract work which may require or involve the employment of laborers or mechanics, including watchmen and guards, shall require or permit any laborer or mechanic in any workweek in which he is employed on such work to work in excess of 40 hours in such work week unless such laborer or mechanic receives compensation at a rate not less than one and one-half times his basic rate of pay for all hours worked in excess of 40 hours in such work week, as the case may be.

41. [For Contracts > $150K] Clean Air Act and the Federal Water Pollution Control Act

The Contractor or subcontractor shall comply with all applicable standards, orders or regulations issued pursuant to the Clean Air Act (42 U.S.C. 7401–7671q) and the Federal Water Pollution Control Act as amended (33 U.S.C. 1251–1387). Violations must be reported to the Federal awarding agency and the Regional Office of the Environmental Protection Agency (EPA).

42. Equal Opportunity Clause

During the performance of this contract, the Contractor agrees as follows:

(a.) The Contractor will not discriminate against any employee or applicant for employment because of race, color, religion, sex, sexual orientation, gender identity, or national origin. The Contractor will take affirmative action to ensure that applicants are employed, and that employees are treated during employment without regard to their race, color, religion,

of this clause, regular contributions made or costs incurred for more than a weekly period under plans, funds, or programs, but covering the particular weekly period, are deemed to be constructively made or incurred during such weekly period.

The Contractor and its subcontractors shall not, by any means, induce any person employed in the construction, completion, or repair of public work, give up any part of the compensation to which he or she is otherwise entitled. The County must report all suspected or reported violations to TDA.

36. Conflicts Disclosure Statement. (Sec. 176.003 in Chapter 176 of the Local Government Code)

a. A local government officer shall file a conflicts disclosure statement with respect to a vendor if:

1) the vendor enters into a contract with the local governmental entity or the local governmental entity is considering entering into a contract with the vendor; and

2) the vendor:

(A) has an employment or other business relationship with the local government officer or a family member of the officer that results in the officer or family member receiving taxable income, other than investment income, that exceeds $2,500 during the 12-month period preceding the date that the officer becomes aware that: (i) a contract between the local governmental entity and vendor has been executed; or (ii) the local governmental entity is considering entering into a contract with the vendor;

(B) has given to the local government officer or a family member of the officer one or more gifts that have an aggregate value of more than $100 in the 12-month period preceding the date the officer becomes aware that: (i) a contract between the local governmental entity and vendor has been executed; or (ii) the local governmental entity is considering entering into a contract with the vendor; or has a family relationship with the local government officer.

(a-1). A local government officer is not required to file a conflicts disclosure statement in relation to a gift accepted by the officer or a family member of the officer if the gift is: (1) a political contribution as defined by Title 15, Election Code; or (2) food accepted as a guest.

(a-2). A local government officer is not required to file a conflicts disclosure statement under Subsection (a) if the local governmental entity or vendor described by that subsection is an administrative agency created under Section 791.013, Government Code.

b. A local government officer shall file the conflicts disclosure statement with the records administrator of the local governmental entity not later than 5 p.m. on the seventh business day after the date on which the officer becomes aware of the facts that require the filing of the statement under Subsection (a).

37. Conflicts of interest.

(a) Governing Body. No member of the governing body of the County and no other officer, employee, or agent of the County, who exercises any functions or responsibilities in connection with administration, construction, engineering, or implementation of TxCDBG award between TDA and the City / County, shall have any personal financial interest, direct or indirect, in the Contractor or this Contract; and the Firm shall take appropriate steps to assure compliance.

(b) Other Local Public Officials. No other public official, who exercises any functions or responsibilities in connection with the planning and carrying out of administration, construction, engineering or implementation of the TxCDBG award between TDA and the County, shall have any personal financial interest, direct or indirect, in the Contractor or this Contract; and the Contractor shall take appropriate steps to assure compliance.

(c) The Contractor and Employees. The Contractor warrants and represents that it has no conflict of interest associated with the TxCDBG award between TDA and the County or this Contract. The Contractor further warrants and represents that it shall not acquire an interest, direct or indirect, in any geographic area that may benefit from the TxCDBG award between TDA and the County or in any business, entity, organization or person that may benefit from the award. The Contractor further agrees that it will not employ an individual with a conflict of interest as described herein.

38. Debarment and Suspension (Executive Orders 12549 and 12689)

(b) The Contractor shall not be responsible for any damages or maintenance costs due directly to the use of such sections.

31. Local Program Liaison

For purposes of this Agreement, the [*e.g. City Manager/County* _____] or equivalent authorized person will serve as the Local Program Liaison and primary point of contact for the Contractor. All required progress reports and communication regarding the project shall be directed to this liaison and other local personnel as appropriate.

32. Access to Information

(a) The U.S. Department of Housing and Urban Development (HUD), Inspectors General, the Comptroller General of the United States, the Texas Department of Agriculture (TDA), and the County, or any of their authorized representatives, shall have access to any documents, papers, or other records of the Contractor which are pertinent to the TxCDBG award, in order to make audits, examinations, excerpts, and transcripts, and to closeout the City's/County's TxCDBG contract with TDA.

(b) Contractor shall include the substance of this clause in all subcontracts it awards.

33. Records Retention

(a) The Contractor shall retain all required records for three years after the County makes its final payment and all pending matters are closed.

(b) Contractor shall include the substance of this clause in all subcontracts it awards.

34. Resolution of Program Non-Compliance and Disallowed Costs

In the event of any dispute, claim, question, or disagreement arising from or relating to this Contract, or the breach thereof, including determination of responsibility for any costs disallowed as a result of non-compliance with federal, state or TxCDBG program requirements, the parties hereto shall use their best efforts to settle the dispute, claim, question or disagreement. To this effect, the parties shall consult and negotiate with each other in good faith within 30 days of receipt of a written notice of the dispute or invitation to negotiate, and attempt to reach a just and equitable solution satisfactory to both parties. If the matter is not resolved by negotiation within 30 days of receipt of written notice or invitation to negotiate, the parties agree first to try in good faith to settle the matter by mediation administered by the American Arbitration Association under its Commercial Mediation Procedures before resorting to arbitration, litigation, or some other dispute resolution procedure. The parties may enter into a written amendment to this Contract and choose a mediator that is not affiliated with the American Arbitration Association. The parties shall bear the costs of such mediation equally. *[This section may also provide for the qualifications of the mediator(s), the locale of meetings, time limits, or any other item of concern to the parties.]* If the matter is not resolved through such mediation within 60 days of the initiation of that procedure, either party may proceed to file suit.

35. Compliance with Davis-Bacon Act

All laborers and mechanics employed upon the work covered by this Contract shall be paid unconditionally and not less often than once each week, and without subsequent deduction or rebate on any account (except such payroll deductions as are made mandatory by law and such other payroll deductions as are permitted by the applicable regulations issued by the Secretary of Labor, United States Department of Labor, pursuant to the Anti-Kickback Act hereinafter identified), the full amount due at time of payment computed at wage rates not less than those contained in the wage determination decision of said Secretary of Labor (**a copy of which is attached as Attachment __ and herein incorporated by reference**), regardless of any contractual relationship which may be alleged to exist between the Contractor or any subcontractor and such laborers and mechanics. All laborers and mechanics employed upon such work shall be paid in cash, except that payment may be by check if the employer provides or secures satisfactory facilities approved by the County for the cashing of the same without cost or expense to the employee. For the purpose of this clause, contributions made or costs reasonably anticipated under Section 1 (b) (2) of the Davis-Bacon Act on behalf of laborers or mechanics are considered wages paid to such laborers or mechanics, subject to the provisions of Section 5.5 (a) (1) (iv) of Title 29, Code of Federal Regulations. Also for the purpose

(a) Worker's Compensation Insurance: The Contractor shall procure and shall maintain during the life of this contract Worker's Compensation Insurance as required by the State of Texas for all of his employees to be engaged in work at the site of the project under this contract and, in case of any such work sublet, the Contractor shall require the subcontractor similarly to provide Worker's Compensation Insurance for all of the employees to be engaged in such work unless such employees are covered by the protection afforded by the Contractor's Worker's Compensation Insurance.

(b) Contractor's Public Liability and Property Damage Insurance and Vehicle Liability Insurance. The Contractor shall procure and shall maintain during the life of this contract Contractor's Public Liability Insurance, Contractor's Property Damage Insurance and Vehicle Liability Insurance in the following amounts: ($1,000,000 - $1,000,000 - $500,000).

(c) Proof of Insurance: The Contractor shall furnish the County with certificates showing the type, amount, class of operations covered, effective dates and date of expiration of policies. Such certificates shall also contain substantially the following statement: "The insurance covered by this certificate will not be canceled or materially altered, except after ten (10) days written notice has been received by the County."

27. Warranty of Title

No material, supplies, or equipment to be installed or furnished under this Contract shall be purchased subject to any chattel mortgage or under a conditional sale, lease-purchase or other agreement by which an interest is retained by the seller or supplier. The Contractor shall warrant good title to all materials, supplies, and equipment installed or incorporated in the work and upon completion of all work, shall deliver the same, together with all improvements and appurtenances constructed or placed by Contractor, to the County free from any claims, liens, or charges. Neither the Contractor nor any person, firm, or corporation furnishing any material or labor for any work covered by this Contract shall have any right to a lien upon any improvement or appurtenance. Nothing contained in this paragraph, however, shall defeat or impair the right of persons furnishing materials or labor to recover under any law permitting such persons to look to funds due the Contractor. The provisions of this paragraph shall be inserted in all subcontracts and material contracts and notice of its provisions shall be given to all persons furnishing materials for the work when no formal contract is entered into for such materials.

28. Warranty of Workmanship and Materials

Neither the final certificate of payment nor any provision in the Contract nor partial or entire use of the improvements included in this Contract by the County or the public shall constitute an acceptance of work not done in accordance with the Contract or relieve the Contractor of liability in respect to any express warranties or responsibility for faulty materials or workmanship. The Contractor shall promptly remedy any defects in the work and pay for any damage to other work resulting therefrom which shall appear within a period of 24 months from the date of final acceptance of the work.

29. Job Offices

(a) The Contractor and its subcontractors may maintain such office and storage facilities on the site as are necessary for the proper conduct of the work. These shall be located so as to cause no interference to any work to be performed on the site. The County shall be consulted with regard to locations.

(b) Upon completion of the improvements, or as directed by the County, the Contractor shall remove all such temporary structures and facilities from the site, and leave the site of the work in the condition required by the Contract.

30. Partial Use of Site Improvements

The County may give notice to the Contractor and place in use those sections of the improvements which have been completed, inspected and can be accepted as complying with the technical specifications and if in its opinion, each such section is reasonably safe, fit, and convenient for the use and accommodation for which it was intended, provided:

(a) The use of such sections of the Improvements shall in no way impede the completion of the remainder of the work by the Contractor.

to proceed at once with the correction of rejected workmanship or defective material, the County may by contract or otherwise have the defects remedied or rejected materials removed from the Project Area and charge the cost of the same against any Monies which may be due the Contractor, without prejudice to any other rights or remedies of the County.

(b) The Contractor shall furnish promptly all materials reasonably necessary for any tests which may be required. All tests by the County will be performed in such manner as not to delay the work unnecessarily and will be made in accordance with the provisions of the technical specifications.

(c) The Contractor shall notify the County sufficiently in advance of back filling or concealing any facilities to permit proper inspection. If any facilities are concealed without approval or consent of the County, the Contractor shall uncover for inspection and recover such facilities at Contractor's expense, when so requested by the County.

(d) Should it be considered necessary or advisable by the County at any time before final acceptance of the entire work to make an examination of work already completed, the Contractor shall on request promptly furnish all necessary facilities, labor, and material. If such work is found to be defective in any important or essential respect, due to fault of the Contractor or subcontractors, the Contractor shall defray all the expenses of such examination and of satisfactory reconstruction. If, however, such work is found to meet the requirements of the Contract, the actual cost of labor and material necessarily involved in the examination and replacement, shall be reimbursable and if completion of the work of the entire Contract has been delayed, a suitable extension of time will be approved.

(e) Inspection of materials and appurtenances to be incorporated in the improvements included in this Contract may be made at the place of production, manufacture or shipment, whenever the quantity justifies it, and such inspection and acceptance, unless otherwise stated in the technical specifications, shall be final, except as regards to: (1) latent defects, (2) departures from specific requirements of the Contract, (3) damage or loss in transit, or (4) fraud or such gross mistakes as amount to fraud. Subject to the requirements contained in the preceding sentence, the inspection of materials as a whole or in part will be made at the Project Site.

(f) Neither inspection, testing, approval nor acceptance of the work in whole or in part, by the County or its agents shall relieve the Contractor or its sureties of full responsibility for materials furnished or work performed not in strict accordance with the Contract.

23. Review by County

The County and its authorized representatives and agents shall have access to and be permitted to observe and review all work, materials, equipment, payrolls, personnel records, employment conditions, material invoices, and other relevant data and records pertaining to this Contract, provided, however that all instructions and approval with respect to the work will be given to the Contractor only by the County through its authorized representatives or agents.

24. Final Inspection

When the Improvements included in this Contract are substantially completed, the Contractor shall notify the County in writing that the work will be ready for final inspection on a definite date which shall be stated in the notice. The County will make the arrangements necessary to have final inspection commenced on the date stated in the notice, or as soon thereafter as is practicable.

25. Deduction for Uncorrected Work

If the County deems it not expedient to require the Contractor to correct work not done in accordance with the Contract Documents, an equitable deduction from the Contract Price will be made by agreement between the Contractor and the County and subject to settlement, in case of dispute, as herein provided.

26. Insurance

The Contractor shall not commence work under this contract until all required insurance under this paragraph has been secured and approved by the County.

(a) No laborer or mechanic employed in the performance of this Contract shall be required to work in surroundings or under working conditions which are unsanitary, hazardous, or dangerous to his health or safety as determined under construction safety and health standards promulgated by the Department of Labor.

(b) The Contractor shall exercise proper precaution at all times for the protection of persons and property and shall be responsible for all damages to persons or property, either on or off the site, which occur as a result of his prosecution of the work.

(c) The Contractor shall maintain an accurate record of all cases of death, occupational disease, or injury requiring medical attention or causing loss of time from work, arising out of and in the course of employment on work under the Contract. The Contractor shall promptly furnish the County with reports concerning these matters.

(d) The Contractor shall indemnify and hold harmless the County from any claims for damages resulting from property damage, personal injury and/or death suffered or alleged to have been suffered by any person as a result of any work conducted under this contract.

(e) The Contractor shall provide trench safety for all excavations more than five feet deep prior to excavation. All OSHA Standards for trench safety must be adhered to by the Contractor.

(f) The contractor shall at all times conduct work in such a manner as to ensure the least possible inconvenience to vehicular and pedestrian traffic. At the close of the work each day, all streets where possible in the opinion of the County, shall be opened to the public in order that persons living in the area may have access to their homes or businesses by the use of the streets. Barricades, warning signs, and necessary lighting shall be provided to the satisfaction of the County at the expense of the Contractor.

19. Sanitary Facilities

The Contractor shall furnish, install and maintain ample sanitary facilities for laborers. As the needs arise, a sufficient number of enclosed temporary toilets shall be conveniently placed as required. Drinking water shall be provided from an approved source, so piped or transported as to keep it safe and fresh and served from single service containers or satisfactory types of sanitary drinking stands or fountains. All such facilities and services shall be furnished in strict accordance with existing and governing health regulations.

20. Use of Premises

(a) The Contractor shall confine equipment, storage of materials, and construction operations to the contract limits as shown on the drawings and as prescribed by ordinances or permits, or as may be desired by the County, and shall not unreasonably encumber the site or public rights of way with materials and construction equipment.

(b) The Contractor shall comply with all reasonable instructions of the County and all existing federal, state and local regulations regarding signs, advertising, traffic, fires, explosives, danger signals, and barricades.

21. Removal of Debris, Cleaning, Etc.

The Contractor shall, periodically or as directed during the progress of the work, remove and legally dispose of all surplus excavated material and debris, and keep the Project Area and public rights of way reasonably clear. Upon completion of the work, he shall remove all temporary construction facilities, debris and unused materials provided for work, and put the whole site of the work and public rights of way in a neat and clean condition.

22. Inspection

(a) All materials and workmanship shall be subject to inspection, examination, or test by the County and Engineer at any and all times during manufacture or construction and at any and all places where such manufacture or construction occurs. The County shall have the right to reject defective material and workmanship or require its correction. Unacceptable workmanship shall be satisfactorily corrected. Rejected material shall be promptly segregated and removed from the Project Area and replaced with material of specified quality without charge. If the Contractor fails

(a) The Contractor shall give all notices required by and comply with all applicable federal and state laws, ordinances, and codes of the Local Government. All construction work and/or utility installations shall comply with all applicable ordinances, and codes including all written waivers. Before installing any work, the Contractor shall examine the drawings and technical specifications for compliance with applicable ordinances and codes and shall immediately report any discrepancy to the County. Where the requirements of the drawings and technical specifications fail to comply with such applicable ordinances or codes, the County will adjust the Contract by Change Order to conform to such ordinances or codes (unless waivers in writing covering the difference have been granted by the governing body or department) and make appropriate adjustment in the Contract Price or stipulated unit prices.

(b) Should the Contractor fail to observe the foregoing provisions and proceed with the construction and/or install any utility at variance with any applicable ordinance or code, including any written waivers (notwithstanding the fact that such installation is in compliance with the drawings and technical specifications), the Contractor shall remove such work without cost to the County.

(c) The Contractor shall at his own expense, secure and pay for all permits for street pavement, sidewalks, shed, removal of abandoned water taps, sealing of house connection drains, pavement cuts, buildings, electrical, plumbing, water, gas and sewer permits required by the local regulatory body or any of its agencies.

(d) The Contractor shall comply with applicable local laws and ordinances governing the disposal of surplus excavation, materials, debris and rubbish on or off the Project Area and commit no trespass on any public or private property in any operation due to or connected with the Improvements contained in this Contract.

(e) The Contractor will be required to make arrangements for and pay the water, electrical power, or any other utilities required during construction.

(f) During construction of this project, the Contractor shall use every means possible to control the amount of dust created by construction. Prior to the close of a day's work, the Contractor, if directed by the County, shall moisten the surrounding area to prevent a dusty condition.

17. <u>Care of Work</u>

(a) The Contractor shall be responsible for all damages to person or property that occur as a result of its fault or negligence in connection with the prosecution of the work and shall be responsible for the proper care and protection of all materials delivered and work performed until completion and final acceptance.

(b) In an emergency affecting the safety of life, limb or property, including adjoining property, the Contractor, without special instructions or authorization from the County is authorized to act to prevent such threatened loss or injury. Contractor shall follow all instructions of County.

(c) The Contractor shall avoid damage as a result of his operations to existing sidewalks, streets, curbs, pavements, utilities (except those which are to be replaced or removed), adjoining property, etc., and shall be responsible for completely repairing any damage thereto caused by the operations.

(d) The Contractor shall shore up, brace, underpin, secure, and protect as maybe necessary, all foundations and other parts of existing structures adjacent to, adjoining, and in the vicinity of the site, which may be in any way affected by the excavations or other operations connected with the construction of the improvements included in this Contract. The Contractor shall be responsible for the giving of any and all required notices to any adjoining or adjacent property owner or other party before the commencement of any work. The Contractor shall indemnify and save harmless the County from any damages on account of settlements or the loss of lateral support of adjoining property and from all loss or expense and all damages for which the County may become liable in consequence of such injury or damage to adjoining and adjacent structures and their premises.

18. <u>Accident Prevention</u>

equipment, materials, articles or workmanship are referred to in the technical specifications as "equal to" any particular standard, the Engineer shall decide the question of equality.

(b) The Contractor shall furnish to the County for approval the manufacturer's detailed specifications for all machinery, mechanical and other special equipment, which he contemplates installing together with full information as to type, performance characteristics, and all other pertinent information as required, and shall likewise submit for approval full information concerning all other materials or articles which he proposes to incorporate.

(c) Machinery, mechanical and other equipment, materials or articles installed or used without such prior approval shall be at the risk of subsequent rejection.

(d) Materials specified by reference to the number or symbol of a specific standard, shall comply with requirements in the latest revision thereof and any amendment or supplement thereto in effect on the date of the Invitation for Bids, except as limited to type, class or grade, or modified in the technical specifications shall have full force and effect as though printed therein.

(e) The County may require the Contractor to dismiss from the work such employee or employees as the County or the Engineer may deem unqualified.

15. Samples, Certificates and Tests

(a) The Contractor shall submit all material or equipment samples, certificates, affidavits, etc., as called for in the contract documents or required by the Engineer, promptly after award of the contract and acceptance of the Contractor's bond. No such material or equipment shall be manufactured or delivered to the site, except at the Contractor's own risk, until the required samples or certificates have been approved in writing by the Engineer. Any delay in the work caused by late or improper submission of samples or certificates for approval shall not be considered just cause for an extension of the contract time.

(b) Each sample submitted by the Contractor shall carry a label giving the name of the Contractor, the project for which it is intended, and the name of the producer. The accompanying certificate or letter from the Contractor shall state that the sample complies with contract requirements, shall give the name and brand of the product, its place of origin, the name and address of the producer and all specifications or other detailed information which will assist the Engineer in making a prompt decision regarding the acceptability of the sample. It shall also include the statement that all materials or equipment furnished for use in the project will comply with the samples and/or certified statements.

(c) Approval of any materials shall be general only and shall not constitute a waiver of the County's right to demand full compliance with Contract requirements. After actual deliveries, the Engineer will have such check tests made as he deems necessary in each instance and may reject materials and equipment and accessories for cause, even though such materials and articles have been given general approval. If materials, equipment or accessories which fail to meet check tests have been incorporated in the work, the Engineer will have the right to cause their removal and replacement by proper materials or to demand and secure such reparation by the Contractor as is equitable.

(d) Except as otherwise specifically stated in the Contract, the costs of sampling and testing will be divided as follows:

1) The Contractor shall furnish without extra cost, including packing and delivery charges, all samples required for testing purposes, except those samples taken on the project by the Engineer;

2) The Contractor shall assume all costs of re-testing materials which fail to meet contract requirements;

3) The Contractor shall assume all costs of testing materials offered in substitution for those found deficient;

4) The County will pay all other expenses.

16. Permits and Codes

If, upon the basis of the facts and the terms of this contract, the delay is properly excusable, the County shall extend the time for completing the work for a period of time commensurate with the period of excusable delay.

10. Assignment or Novation

The Contractor shall not assign nor transfer, whether by assignment or novation, any of its rights, duties, benefits, obligations, liabilities, or responsibilities under this Contract without the written consent of the County. No assignment or novation of this Contract shall be valid unless the assignment or novation expressly provides that the assignment of any of the Contractor's rights or benefits under the Contract is subject to a prior lien for labor performed, services rendered, and materials, tools, and equipment supplied for the performance of the work under this Contract in favor of all persons, Contractors, or corporations rendering such labor or services or supplying such materials, tools, or equipment.

11. Technical Specifications and Drawings

Anything mentioned in the Technical Specifications and not shown on the Drawings or vice versa, shall be of like effect as if shown on or mentioned in both. In case of difference between Drawings and Technical Specifications, the Technical Specifications shall govern. In case of any discrepancy in Drawings, or Technical Specifications, the matter shall be immediately submitted to the County for review. Contractor shall be liable for any issues or expenses in the event the discrepancy is not submitted to the County.

12. Shop Drawings

(a) All required shop drawings, machinery details, layout drawings, etc. shall be submitted to the Engineer in _____ copies for approval sufficiently in advance of requirements to afford ample time for checking, including time for correcting, resubmitting and rechecking if necessary. The Contractor may proceed, only at Contractor's own risk, with manufacture or installation of any equipment or work covered by said shop drawings, etc. until they are approved and no claim, by the Contractor, for extension of the contract time shall be granted by reason of his failure in this respect.

(b) Any drawings submitted without the Contractor's stamp of approval will not be considered and will be returned to him for proper resubmission. If any drawings show variations from the requirements of the Contract because of standard shop practice or other reason, the Contractor shall make specific mention of such variation in his letter of transmittal in order that, if acceptable, suitable action may be taken for proper adjustment of contract price and/or time, otherwise the Contractor will not be relieved of the responsibility for executing the work in accordance with the Contract even though the drawings have been approved.

(c) If a shop drawing is in accordance with the contract or involves only minor adjustment in the interest of the County not involving a change in contract price or time, the engineer may approve the drawing. The approval shall not relieve the Contractor from responsibility to adhere to the contract or for any error in the drawing.

13. Requests for Supplementary Information

It shall be the responsibility of the Contractor to make timely requests of the County for any additional information which should be furnished by the County under the terms of this Contract, and which is required in the planning and execution of the work. Such requests may be submitted from time to time as the need approaches, but each shall be filed in ample time to permit appropriate action to be taken by all parties involved so as to avoid delay. Each request shall be in writing, and list the various items and the latest date by which each will be required by the Contractor. The first list shall be submitted within two weeks after Contract award and shall be as complete as possible at that time. The Contractor shall, if requested, furnish promptly any assistance and information the Engineer may require in responding to these requests of the Contractor. The Contractor shall be fully responsible for any delay in his work or to others arising from his failure to comply fully with the provision of this section.

14. Materials and Workmanship

(a) Unless otherwise specifically provided for in the technical specifications, all workmanship, equipment, materials and articles incorporated in the work shall be new and the best grade of the respective kinds for the purpose. Where

(a) Right of the County to Terminate Contract for Convenience

County may at any time and for any reason terminate Contractor's services and work at County's convenience upon providing written notice to the Contractor specifying the extent of termination and the effective date. Upon receipt of such notice, Contractor shall, unless the notice directs otherwise, immediately discontinue the work and placing of orders for materials, facilities and supplies in connection with the performance of this Agreement.

Upon such termination, Contractor shall be entitled to payment only as follows: (1) the actual cost of the work completed in conformity with this Agreement plus (2) such other costs actually incurred by Contractor as are permitted by the prime contract and approved by County. There shall be deducted from such sums as provided in this subparagraph the amount of any payments made to Contractor prior to the date of the termination of this Agreement. Contractor shall not be entitled to any claim or claim of lien against County for any additional compensation or damages in the event of such termination and payment.

(b) Right of the County to Terminate Contract for Cause

In the event that any of the provisions of this contract are violated by the Contractor, or by any subcontractors, the County may serve written notice upon the Contractor and the Surety of its intention to terminate the contract. The notices shall contain the reasons for such intention to terminate the contract, and unless such violation or delay shall cease and satisfactory arrangement of correction be made within ten days, the contract shall, upon the expiration of said ten (10) days, cease and terminate. In the event of any such termination, the County shall immediately serve notice thereof upon the Surety and the Contractor. The Surety shall have the right to take over and perform the contract. Provided, however, that if the Surety does not commence performance thereof within ten (10) days from the date of the mailing to such Surety of notice of termination, the County may take over the work and complete the project by bid/contract or by force account at the expense of the Contractor and his Surety shall be liable to the County for any excess cost incurred. In such event the County may take possession of and utilize in completing the work, such materials, appliances, and plant as may be on the site of the work and necessary therefore.

(c) Liquidated Damages for Delays.

If the work is not completed within the time stipulated in the applicable bid for Lump Sum or Unit Price Contract provided, the Contractor shall pay to the County as fixed, agreed, and liquidated damages (it being impossible to determine the actual damages occasioned by the delay) the amount of two hundred dollars ($200.00) for each calendar day of delay, until the work is completed. The Contractor and Contractor's sureties shall be liable to the County for the amount thereof.

(d) Excusable Delays.

1) The right of the Contractor to proceed shall not be terminated nor shall the Contractor be charged with liquidated damages for any delays in the completion of the work due to:

2) Any acts of the Government, including controls or restrictions upon or requisitioning of materials, equipment, tools, or labor by reason of war, national defense, or any other national emergency;

3) Any acts of the County;

4) Causes not reasonably foreseeable by the parties to this Contract at the time of execution which are beyond the control and without the fault or negligence of the Contractor, including, but not restricted to, acts of God, terrorism, war, acts of another Contractor in the performance of some other contract with the County, fires, floods, epidemics, quarantine, restrictions, strikes, freight embargoes, and weather of unusual severity such as hurricanes, tornadoes, cyclones and other extreme weather conditions.

5) Provided, however, that the Contractor promptly notifies the County within ten (10) days in writing of the cause of the delay. Upon receipt of such notification, the County shall ascertain the facts and the cause and extent of delay.

of the County to withhold any moneys from the Contractor shall in no way impair the obligations of any surety or sureties under any bond or bonds furnished under this Contract.

7. Changes in the Work

(a) The County may make changes in the scope of work required to be performed by the Contractor under the Contract without relieving or releasing the Contractor from any obligations under the Contract or any guarantee given pursuant to the Contract provisions, and without affecting the validity of the guaranty bonds, and without relieving or releasing the surety or sureties of said bonds. All such work shall be executed under the terms of the original Contract unless it is expressly provided otherwise. Additionally, all such change orders must be approved by TxCDBG prior to execution of same.

(b) Except for the purpose of affording protection against any emergency endangering health, life, limb or property, the Contractor shall make no change in the materials used or in the specified manner of constructing and/or installing the improvements or supply additional labor, services or materials beyond that actually required for the execution of the Contract, unless in pursuance of a written order from the County authorizing the Contractor to proceed with the change. No claim for an adjustment of the Contract Price will be valid unless so ordered.

(c) If applicable unit prices are contained in the Contract, the County may order the Contractor to proceed with desired unit prices specified in the Contract; provided that in case of a unit price contract the net value of all changes does not increase the original total amount of the agreement by more than twenty-five percent (25%) or decrease the original the total amount by eighteen percent (18%).

(d) Each change order shall include in its final form:

1) A detailed description of the change in the work.

2) The Contractor's proposal (if any) or a confirmed copy thereof.

3) A definite statement as to the resulting change in the contract price and/or time.

4) The statement that all work involved in the change shall be performed in accordance with contract requirements except as modified by the change order.

5) The procedures as outlined in this Section for a unit price contract also apply in any lump sum contract.

8. Claims for Extra Cost

(a) If the Contractor claims that any instructions by Drawings or otherwise involve extra cost or extension of time, he shall, within ten days after the receipt of such instructions, and in any event before proceeding to execute the work, submit his protest thereto in writing to the County, stating clearly and in detail the basis of his objections. No such claim will be considered unless so made.

(b) Claims for additional compensation for extra work, due to alleged errors in ground elevations, contour lines, or bench marks, will not be recognized unless accompanied by certified survey data, made prior to the time the original ground was disturbed, clearly showing that errors exist which resulted, or would result, in handling more material, or performing more work, than would be reasonably estimated from the Drawings and maps issued.

(c) Any discrepancies which may be discovered between actual conditions and those represented by the Drawings and maps shall be reported at once to the County and work shall not proceed except at the Contractor's risk, until written instructions have been received from the County.

(d) If, on the basis of the available evidence, the County determines that an adjustment of the Contract Price and/or time is justifiable, a change order shall be executed.

9. Termination, Delays, and Liquidated Damages

(d) Nothing contained in the Contract shall create any contractual relation between any subcontractor and the County.

5. Fitting and Coordination of Work

The Contractor shall be responsible for the proper fitting of all work and for the coordination of the operations of all trades, subcontractors, or material suppliers engaged upon this Contract.

6. Payments to Contractor

(a) Partial Payments

1) The Contractor shall prepare the requisition for partial payment as of the last day of the month and submit it, with the required number of copies, to the Engineer for approval. The amount of the payment due the Contractor shall be determined by adding to the total value of work completed to date, the value of materials properly stored on the site and deducting (1) ten percent (10%) of the total amount, to be retained until final payment, and (2) the amount of all previous payments. The total value of work completed to date shall be based on the estimated quantities of work completed and on the unit prices contained in the agreement. The value of materials properly stored on the site shall be based upon the estimated quantities of such materials and the invoice prices. Copies of all invoices shall be available for inspection of the Engineer.

2) Monthly or partial payments made by the County to the Contractor are advanced for the purpose of assisting the contractor to expedite the work of construction. The Contractor shall be responsible for the care and protection of all materials and work upon which payments have been made until final acceptance of such work and materials by the County. Such payments shall not constitute a waiver of the right of the County to require the fulfillment of all terms of the Contract and the delivery of all improvements embraced in this Contract complete and satisfactory to the County in all details.

(b) Final Payment

1) After final inspection and the acceptance by the County of all work under the Contract, the Contractor shall prepare the requisition for final payment which shall be based upon the careful inspection of each item of work at the applicable unit prices stipulated in the Contract. The total amount of the final payment due the Contractor under this Contract shall be the amount computed as described above less all previous payments.

2) Before paying the final estimate, County shall require the Contractor to furnish releases or receipts from all subcontractors having performed any work and all persons having supplied materials, equipment (installed on the Project) and services to the Contractor. The County may make payment in part or in full to the Contractor without requiring the furnishing of such releases or receipts and any payments made shall in no way impair the obligations of any surety or sureties furnished under this Contract.

3) Any amount due the County under Liquidated Damages, shall be deducted from the final payment due the contractor.

(c) Payments Subject to Submission of Certificates

Each payment to the Contractor by the County shall be made subject to submission by the Contractor of all written certifications required of it and its subcontractors.

(d) Withholding Payments

The County may withhold any payment due the Contractor as deemed necessary to protect the County, and if so elects, may also withhold any amounts due from the Contractor to any subcontractors or material dealers, for work performed or material furnished by them. The foregoing provisions shall be construed solely for the benefit of the County and will not require the County to determine or adjust any claims or disputes between the Contractor and its subcontractors or material dealers, or to withhold any moneys for their protection unless the County elects to do so. The failure or refusal

GENERAL CONDITIONS - PART I
FOR CONSTRUCTION

1. Contract and Contract Documents

(a) The project to be constructed pursuant to this contract will be financed with assistance from the Texas Department of Agriculture - Office of Rural Affairs through a Community Development Block Grant (TxCDBG) and is subject to all applicable Federal and State laws and regulations.

(b) The Plans, Specifications and Addenda shall form part of this contract and the provisions thereof shall be binding upon the parties as if they were herein fully set forth.

2. Definitions

Whenever used in any of the Contract Documents, the following meanings shall be given to the terms here in defined:

(a) The term "Contract" means the Contract executed between the Johnson County, hereinafter called the "County" and (Name of Construction Co.), hereinafter called "Contractor", of which these GENERAL CONDITIONS, form a part.

(b) The term "Project Area" means the area within the specified Contract limits of the Improvements contemplated to be constructed in whole or in part under this contract.

(c) The term "Engineer" means Daniel & Brown Inc., Engineer in charge, serving the County with architectural or engineering services, his successor, or any other person or persons, employed by the County for the purpose of directing or having in charge the work embraced in this Contract.

(d) The term "Contract Documents" means and shall include the following: Executed Contract, Addenda (if any), Invitation for Bids, Instructions to Bidders, Signed Copy of Bid, General Conditions, Special Conditions, Technical Specifications, and Drawings (as listed in the Schedule of Drawings).

3. Supervision By Contractor

(a) Except where the Contractor is an individual and personally supervises the work, the Contractor shall provide a competent superintendent, satisfactory to the Engineer, on the work at all times during working hours with full authority to act as Contractor's agent. The Contractor shall also provide adequate staff for the proper coordination and expediting of his work.

(b) The Contractor shall be responsible for all work executed under the Contract. Contractor shall verify all figures and elevations before proceeding with the work and will be held responsible for any error resulting from his failure to do so.

4. Subcontracts

(a) The Contractor shall not execute an agreement with any subcontractor or permit any subcontractor to perform any work included in this contract until Contractor has verified the subcontractor is eligible to participate in federally funded contracts.

(b) No proposed subcontractor shall be disapproved by the County except for cause.

(c) The Contractor shall be as fully responsible to the County for the acts and omissions of his subcontractors, and of persons either directly or indirectly employed by them.

ATTORNEY'S REVIEW CERTIFICATION

I, the undersigned County Attorney of Johnson County, the duly authorized and acting legal representative of Johnson County, Texas hereby certify as follows:

I have examined the attached construction contract (Waterline Improvement Project, FM 4 & CR 1121, TxCDBG 7218250), payment bond, performance bond and other documents related to the project provided by GrantWorks and based upon the documents provided by GrantWorks am of the opinion that each of the documents may be duly executed by the proper parties, acting through their duly authorized representatives; that said representatives have full power and authority to execute said documents on behalf of the respective parties; and that the documents shall constitute valid and legally binding obligations upon the parties executing the same in accordance with terms, conditions and provisions thereof.

_____ Date: _____

Bill Moore
County Attorney, Johnson County
204 S. Buffalo Avenue, Suite 410
Cleburne, Texas 76033
817-556-6330

Cyber Liability - Axis Insurance Company - CYB101875 - 7/22/2020-2021

$1,000,000 Cyber Liability Enterprise Security Event
$1,000,000 Payment Card Industry Data Security Standards
$1,000,000 Privacy Regulation
$1,000,000 Crisis Management Expense
$1,000,000 Fraud Response Expense
$1,000,000 Public Relations Expense
$1,000,000 Forensic and Legal Expense
$1,000,000 Extortion Loss
$ 250,000 Extortion Threat Reward Reimbursement
$1,000,000 Ransomware Loss/Website Media Liability/Reputational Harm
$ 250,000 Bricking Coverage/Invoice Manipulation/Social Engineering Fraud Loss/Telecommunications Theft Loss
$1,000,000 Business Interruption/Service Disruption/ServiceFailure/System Disruption/System Failure/Data Recovery Expense

RETENTIONS: $1,000/6 hour waiting period

INSTALLATION FLOATER/INLAND MARINE:

Markel American Insurance Co - MIKLM41M0051886 - 2/15/2021-2022 - $5,000 Deductible

$500,000 Jobsite Limit
$500,000 Ctastrophe Limit

Coverage Extensions
$5,000 Additional Debris Removal Expense
$50,000 Fraud/Deceit
$15,000 Limited Fungus Coverage
Supplemental Coverages
$10,000 Business Personal Property
$10,000 Expediting Expenses
$10,000 Pollutant Cleanup and Removal
$1,000 Rewards
$150,000 Temporary Storage Locations
$150,000 Transit

3PATPR1 OP ID: SB

ACORD

CERTIFICATE OF LIABILITY INSURANCE

DATE (MM/DD/YYYY) 04/16/2021

THIS CERTIFICATE IS ISSUED AS A MATTER OF INFORMATION ONLY AND CONFERS NO RIGHTS UPON THE CERTIFICATE HOLDER. THIS CERTIFICATE DOES NOT AFFIRMATIVELY OR NEGATIVELY AMEND, EXTEND OR ALTER THE COVERAGE AFFORDED BY THE POLICIES BELOW. THIS CERTIFICATE OF INSURANCE DOES NOT CONSTITUTE A CONTRACT BETWEEN THE ISSUING INSURER(S), AUTHORIZED REPRESENTATIVE OR PRODUCER, AND THE CERTIFICATE HOLDER.

IMPORTANT: If the certificate holder is an ADDITIONAL INSURED, the policy(ies) must be endorsed. If SUBROGATION IS WAIVED, subject to the terms and conditions of the policy, certain policies may require an endorsement. A statement on this certificate does not confer rights to the certificate holder in lieu of such endorsement(s).

PRODUCER
AIA Insurance Agency
A Div of WinStar Ins Group
PO Box 2143
Denton, TX 76202
AIA Insurance Agency, Inc.

CONTACT NAME: Sandy Batchelor.
PHONE (A/C, No, Ext): 940-898-1604 FAX (A/C, No): 940-898-1252
E-MAIL ADDRESS: sbatchelor@aiainsagency.com

INSURER(S) AFFORDING COVERAGE	NAIC #
INSURER A : Allied World Insurance Co.	
INSURER B : Texas Mutual Insurance Company	
INSURER C : AXIS Ins Co	
INSURER D : Allied World - NAIC - 19489	
INSURER E : Texas Mutual - NAIC - 22945	
INSURER F : AXIS Ins - NAIC 37273	

INSURED
Patterson Professional
Services LLC
P O Box 910
Collinsville, TX 76233

COVERAGES CERTIFICATE NUMBER: REVISION NUMBER:

THIS IS TO CERTIFY THAT THE POLICIES OF INSURANCE LISTED BELOW HAVE BEEN ISSUED TO THE INSURED NAMED ABOVE FOR THE POLICY PERIOD INDICATED. NOTWITHSTANDING ANY REQUIREMENT, TERM OR CONDITION OF ANY CONTRACT OR OTHER DOCUMENT WITH RESPECT TO WHICH THIS CERTIFICATE MAY BE ISSUED OR MAY PERTAIN, THE INSURANCE AFFORDED BY THE POLICIES DESCRIBED HEREIN IS SUBJECT TO ALL THE TERMS, EXCLUSIONS AND CONDITIONS OF SUCH POLICIES. LIMITS SHOWN MAY HAVE BEEN REDUCED BY PAID CLAIMS.

INSR LTR	TYPE OF INSURANCE	ADDL INSD	SUBR WVD	POLICY NUMBER	POLICY EFF (MM/DD/YYYY)	POLICY EXP (MM/DD/YYYY)	LIMITS		
A	X COMMERCIAL GENERAL LIABILITY [ ] CLAIMS-MADE [X] OCCUR X Primary X Mgmt Liab GEN'L AGGREGATE LIMIT APPLIES PER: X POLICY [ ] PRO-JECT [ ] LOC OTHER:	X		5105-1644-05 $1,000 DEDUCTIBLE @$1,000,000 W/$1,000 DED	07/22/2020	07/22/2021	EACH OCCURRENCE DAMAGE TO RENTED PREMISES (Ea occurrence) MED EXP (Any one person) PERSONAL & ADV INJURY GENERAL AGGREGATE PRODUCTS - COMP/OP AGG Pollution	$ 1,000,000 $ 1,000,000 $ 10,000 $ 1,000,000 $ 3,000,000 $ 3,000,000 $ 1,000,000	
A	AUTOMOBILE LIABILITY X ANY AUTO ALL OWNED AUTOS SCHEDULED AUTOS X HIRED AUTOS X NON-OWNED AUTOS X $500 Comp X $500 Coll			5106-1644-05	07/22/2020	07/22/2021	COMBINED SINGLE LIMIT (Ea accident) BODILY INJURY (Per person) BODILY INJURY (Per accident) PROPERTY DAMAGE (Per accident) UM/UIM	$ 1,000,000 $ $ $ PIP $2,500 $ 1,000,000	
A	UMBRELLA LIAB X OCCUR X EXCESS LIAB CLAIMS-MADE DED X RETENTION $ 0			5107-1644-05 FOLLOW FORM	07/22/2020	07/22/2021	EACH OCCURRENCE AGGREGATE $	$ 4,000,000 $ 4,000,000 $	
B	WORKERS COMPENSATION AND EMPLOYERS' LIABILITY ANY PROPRIETOR/PARTNER/EXECUTIVE OFFICER/MEMBER EXCLUDED? (Mandatory in NH) Y/N [Y] If yes, describe under DESCRIPTION OF OPERATIONS below	N/A		0001295385	10/25/2020	10/25/2021	PER STATUTE X OTH-ER E.L. EACH ACCIDENT E.L. DISEASE - EA EMPLOYEE E.L. DISEASE - POLICY LIMIT	$ 1,000,000 $ 1,000,000 $ 1,000,000	
A	BPP/Equipment Special Form w/Cov			5105-1644-05 EXT/RC/IM/LTD FLOOD	07/22/2020	07/22/2021	Blnkt Lim Various	440,000 Deductibles	

DESCRIPTION OF OPERATIONS / LOCATIONS / VEHICLES (ACORD 101, Additional Remarks Schedule, may be attached if more space is required)
Watermaster/Water System Maintenance - Re: Johnson County S.U.D.

CERTIFICATE HOLDER

DANIEL&

Daniel & Brown Inc.
P.O. Box 606
Farmersville, TX 75442

CANCELLATION

SHOULD ANY OF THE ABOVE DESCRIBED POLICIES BE CANCELLED BEFORE THE EXPIRATION DATE THEREOF, NOTICE WILL BE DELIVERED IN ACCORDANCE WITH THE POLICY PROVISIONS.

AUTHORIZED REPRESENTATIVE
Barbara R. Marzian

Cyber Liability - Axis Insurance Company - CYB101875 - 7/22/2020-2021

$1,000,000 Cyber Liability Enterprise Security Event
$1,000,000 Payment Card Industry Data Security Standards
$1,000,000 Privacy Regulation
$1,000,000 Crisis Management Expense
$1,000,000 Fraud Response Expense
$1,000,000 Public Relations Expense
$1,000,000 Forensic and Legal Expense
$1,000,000 Extortion Loss
$ 250,000 Extortion Threat Reward Reimbursement
$1,000,000 Ransomware Loss/Website Media Liability/Reputational Harm
$ 250,000 Bricking Coverage/Invoice Manipulation/Social Engineering Fraud Loss/Telecommunications Theft Loss
$1,000,000 Business Interruption/Service Disruption/ServiceFailure/System Disruption/System Failure/Data Recovery Expense

RETENTIONS: $1,000/6 hour waiting period

INSTALLATION FLOATER/INLAND MARINE:

Markel American Insurance Co - MIKLM41M0051886 - 2/15/2021-2022 - $5,000 Deductible

$500,000 Jobsite Limit
$500,000 Ctastrophe Limit

Coverage Extensions
$5,000 Additional Debris Removal Expense
$50,000 Fraud/Deceit
$15,000 Limited Fungus Coverage
Supplemental Coverages
$10,000 Business Personal Property
$10,000 Expediting Expenses
$10,000 Pollutant Cleanup and Removal
$1,000 Rewards
$150,000 Temporary Storage Locations
$150,000 Transit

3PATPR1 OP ID: SB

ACORD

CERTIFICATE OF LIABILITY INSURANCE

DATE (MM/DD/YYYY) 04/16/2021

THIS CERTIFICATE IS ISSUED AS A MATTER OF INFORMATION ONLY AND CONFERS NO RIGHTS UPON THE CERTIFICATE HOLDER. THIS CERTIFICATE DOES NOT AFFIRMATIVELY OR NEGATIVELY AMEND, EXTEND OR ALTER THE COVERAGE AFFORDED BY THE POLICIES BELOW. THIS CERTIFICATE OF INSURANCE DOES NOT CONSTITUTE A CONTRACT BETWEEN THE ISSUING INSURER(S), AUTHORIZED REPRESENTATIVE OR PRODUCER, AND THE CERTIFICATE HOLDER.

IMPORTANT: If the certificate holder is an ADDITIONAL INSURED, the policy(ies) must be endorsed. If SUBROGATION IS WAIVED, subject to the terms and conditions of the policy, certain policies may require an endorsement. A statement on this certificate does not confer rights to the certificate holder in lieu of such endorsement(s).

PRODUCER
AIA Insurance Agency
A Div of WinStar Ins Group
PO Box 2143
Denton, TX 76202
AIA Insurance Agency, Inc.

CONTACT NAME: Sandy Batchelor.
PHONE (A/C, No, Ext): 940-898-1604 FAX (A/C, No): 940-898-1252
E-MAIL ADDRESS: sbatchelor@aiainsagency.com

INSURER(S) AFFORDING COVERAGE	NAIC #
INSURER A : Allied World Insurance Co.	
INSURER B : Texas Mutual Insurance Company	
INSURER C : AXIS Ins Co	
INSURER D : Allied World - NAIC - 19489	
INSURER E : Texas Mutual - NAIC - 22945	
INSURER F : AXIS Ins - NAIC 37273	

INSURED
Patterson Professional Services LLC
P O Box 910
Collinsville, TX 76233

COVERAGES CERTIFICATE NUMBER: REVISION NUMBER:

THIS IS TO CERTIFY THAT THE POLICIES OF INSURANCE LISTED BELOW HAVE BEEN ISSUED TO THE INSURED NAMED ABOVE FOR THE POLICY PERIOD INDICATED. NOTWITHSTANDING ANY REQUIREMENT, TERM OR CONDITION OF ANY CONTRACT OR OTHER DOCUMENT WITH RESPECT TO WHICH THIS CERTIFICATE MAY BE ISSUED OR MAY PERTAIN, THE INSURANCE AFFORDED BY THE POLICIES DESCRIBED HEREIN IS SUBJECT TO ALL THE TERMS, EXCLUSIONS AND CONDITIONS OF SUCH POLICIES. LIMITS SHOWN MAY HAVE BEEN REDUCED BY PAID CLAIMS.

INSR LTR	TYPE OF INSURANCE	ADDL INSD	SUBR WVD	POLICY NUMBER	POLICY EFF (MM/DD/YYYY)	POLICY EXP (MM/DD/YYYY)	LIMITS	
A	X COMMERCIAL GENERAL LIABILITY [ ] CLAIMS-MADE [X] OCCUR X Primary X Mgmt Liab GEN'L AGGREGATE LIMIT APPLIES PER: X POLICY [ ] PRO-JECT [ ] LOC OTHER:	X		5105-1644-05 $1,000 DEDUCTIBLE @$1,000,000 W/$1,000 DED	07/22/2020	07/22/2021	EACH OCCURRENCE DAMAGE TO RENTED PREMISES (Ea occurrence) MED EXP (Any one person) PERSONAL & ADV INJURY GENERAL AGGREGATE PRODUCTS - COMP/OP AGG Pollution	$ 1,000,000 $ 1,000,000 $ 10,000 $ 1,000,000 $ 3,000,000 $ 3,000,000 $ 1,000,000
A	AUTOMOBILE LIABILITY X ANY AUTO ALL OWNED AUTOS X HIRED AUTOS X $500 Comp [ ] SCHEDULED AUTOS X NON-OWNED AUTOS X $500 Coll			5106-1644-05	07/22/2020	07/22/2021	COMBINED SINGLE LIMIT (Ea accident) BODILY INJURY (Per person) BODILY INJURY (Per accident) PROPERTY DAMAGE (Per accident) UM/UIM	$ 1,000,000 $ $ $ PIP $2,500 $ 1,000,000
A	[ ] UMBRELLA LIAB [X] OCCUR X EXCESS LIAB [ ] CLAIMS-MADE DED X RETENTION $ 0			5107-1644-05 FOLLOW FORM	07/22/2020	07/22/2021	EACH OCCURRENCE AGGREGATE 	$ 4,000,000 $ 4,000,000 $
B	WORKERS COMPENSATION AND EMPLOYERS' LIABILITY ANY PROPRIETOR/PARTNER/EXECUTIVE OFFICER/MEMBER EXCLUDED? Y/N [Y] (Mandatory in NH) If yes, describe under DESCRIPTION OF OPERATIONS below	N/A		0001295385	10/25/2020	10/25/2021	PER STATUTE X OTH-ER E.L. EACH ACCIDENT E.L. DISEASE - EA EMPLOYEE E.L. DISEASE - POLICY LIMIT	 $ 1,000,000 $ 1,000,000 $ 1,000,000
A	BPP/Equipment Special Form w/Cov			5105-1644-05 EXT/RC/IM/LTD FLOOD	07/22/2020	07/22/2021	Blnkt Lim Various	440,000 Deductibles

DESCRIPTION OF OPERATIONS / LOCATIONS / VEHICLES (ACORD 101, Additional Remarks Schedule, may be attached if more space is required)
Watermaster/Water System Maintenance

CERTIFICATE HOLDER

JCSUDIS

Johnson County S.U.D.
P O Box 1390
Joshua, TX 76058

CANCELLATION

SHOULD ANY OF THE ABOVE DESCRIBED POLICIES BE CANCELLED BEFORE THE EXPIRATION DATE THEREOF, NOTICE WILL BE DELIVERED IN ACCORDANCE WITH THE POLICY PROVISIONS.

AUTHORIZED REPRESENTATIVE
Barbara R. Marzian

(This page is intentionally left blank)

CERTIFICATE OF INSURANCE

SOMPO INTERNATIONAL
INSURANCE

POWER OF ATTORNEY

11510

KNOW ALL BY THESE PRESENTS, that **Endurance Assurance Corporation**, a Delaware corporation, **Endurance American Insurance Company**, a Delaware corporation, **Lexon Insurance Company**, a Texas corporation, and/or **Bond Safeguard Insurance Company**, a South Dakota corporation, each, a "Company" and collectively, "**Sompo International,**" do hereby constitute and appoint: **Chandler Nazzal, John A. Aboumrad, William D. Baldwin, Brent Baldwin, Brock Baldwin, Brady K. Cox, Blaine Allen, Russ Frenzel** as true and lawful Attorney(s)-In-Fact to make, execute, seal, and deliver for, and on its behalf as surety or co-surety; bonds and undertakings given for any and all purposes, also to execute and deliver on its behalf as aforesaid renewals, extensions, agreements, waivers, consents or stipulations relating to such bonds or undertakings provided, however, that no single bond or undertaking so made, executed and delivered shall obligate the Company for any portion of the penal sum thereof in excess of the sum of **ONE HUNDRED MILLION Dollars ($100,000,000.00)**.

Such bonds and undertakings for said purposes, when duly executed by said attorney(s)-in-fact, shall be binding upon the Company as fully and to the same extent as if signed by the President of the Company under its corporate seal attested by its Corporate Secretary.

This appointment is made under and by authority of certain resolutions adopted by the sole shareholder of each Company by unanimous written consent effective the 15th day of June, 2019, a copy of which appears below under the heading entitled "Certificate".

This Power of Attorney is signed and sealed by facsimile under and by authority of the following resolution adopted by the sole shareholder of each Company by unanimous written consent effective the 15th day of June, 2019 and said resolution has not since been revoked, amended or repealed:

RESOLVED, that the signature of an individual named above and the seal of the Company may be affixed to any such power of attorney or any certificate relating thereto by facsimile, and any such power of attorney or certificate bearing such facsimile signature or seal shall be valid and binding upon the Company in the future with respect to any bond or undertaking to which it is attached.

IN WITNESS WHEREOF, each Company has caused this instrument to be signed by the following officers, and its corporate seal to be affixed this 15th day of June, 2019.

Endurance Assurance Corporation	Endurance American Insurance Company	Lexon Insurance Company	Bond Safeguard Insurance Company
By: Richard M. Appel	By: Richard M. Appel	By: Richard M. Appel	By: Richard M. Appel
Richard Appel; SVP & Senior Counsel	Richard Appel; SVP & Senior Counsel	Richard Appel; SVP & Senior Counsel	Richard Appel; SVP & Senior Counsel
Endurance Assurance Corporation CORPORATE SEAL 2002 DELAWARE	Endurance American Insurance Company CORPORATE SEAL 1996 DELAWARE	LEXON INSURANCE COMPANY CORPORATE SEAL MARCH 16, 1964 STATE OF TEXAS	BOND SAFEGUARD INSURANCE COMPANY A SOUTH DAKOTA INSURANCE COMPANY

ACKNOWLEDGEMENT

On this 15th day of June, 2019, before me, personally came the above signatories known to me, who being duly sworn, did depose and say that he/they is an officer of each of the Companies; and that he executed said instrument on behalf of each Company by authority of his office under the by-laws of each Company.

By: Amy Taylor
Amy Taylor, Notary Public – My Commission Expires 5/9/23

AMY TAYLOR STATE OF TENNESSEE NOTARY PUBLIC DAVIDSON COUNTY

CERTIFICATE

I, the undersigned Officer of each Company, DO HEREBY CERTIFY that:

1. That the original power of attorney of which the foregoing is a copy was duly executed on behalf of each Company and has not since been revoked, amended or modified; that the undersigned has compared the foregoing copy thereof with the original power of attorney, and that the same is a true and correct copy of the original power of attorney and of the whole thereof;
2. The following are resolutions which were adopted by the sole shareholder of each Company by unanimous written consent effective June 15, 2019 and said resolutions have not since been revoked, amended or modified:

   "RESOLVED, that each of the individuals named below is authorized to make, execute, seal and deliver for and on behalf of the Company any and all bonds, undertakings or obligations in surety or co-surety with others: RICHARD M. APPEL, BRIAN J. BEGGS, CHRISTOPHER DONELAN, SHARON L. SIMS, CHRISTOPHER L. SPARRO, MARIANNE L. WILBERT

   ; and be it further

   RESOLVED, that each of the individuals named above is authorized to appoint attorneys-in-fact for the purpose of making, executing, sealing and delivering bonds, undertakings or obligations in surety or co-surety for and on behalf of the Company."
3. The undersigned further certifies that the above resolutions are true and correct copies of the resolutions as so recorded and of the whole thereof.

IN WITNESS WHEREOF, I have hereunto set my hand and affixed the corporate seal this _____ day of _____, 20_____.

By: _____
Daniel S. Lurie, Secretary

NOTICE: U. S. TREASURY DEPARTMENT'S OFFICE OF FOREIGN ASSETS CONTROL (OFAC)

No coverage is provided by this Notice nor can it be construed to replace any provisions of any surety bond or other surety coverage provided. This Notice provides information concerning possible impact on your surety coverage due to directives issued by OFAC. **Please read this Notice carefully.**

The Office of Foreign Assets Control (OFAC) administers and enforces sanctions policy, based on Presidential declarations of "national emergency". OFAC has identified and listed numerous foreign agents, front organizations, terrorists, terrorist organizations, and narcotics traffickers as "Specially Designated Nationals and Blocked Persons". This list can be located on the United States Treasury's website – https://www.treasury.gov/resource-center/sanctions/SDN-List.

In accordance with OFAC regulations, if it is determined that you or any other person or entity claiming the benefits of any coverage has violated U.S. sanctions law or is a Specially Designated National and Blocked Person, as identified by OFAC, any coverage will be considered a blocked or frozen contract and all provisions of any coverage provided are immediately subject to OFAC. When a surety bond or other form of surety coverage is considered to be such a blocked or frozen contract, no payments nor premium refunds may be made without authorization from OFAC. Other limitations on the premiums and payments may also apply.

Surety Claims Submission: LexonClaimAdministration@sompo-intl.com
Telephone: 615-553-9500 Mailing Address: Sompo International; 12890 Lebanon Road; Mount Juliet, TN 37122-2870

Policyholder Notice

TEXAS - IMPORTANT NOTICE

To obtain information or make a complaint:
You may call the company's telephone number for information or to make a complaint at:

1-877-676-7575

You may write the Company at:

Lexon Insurance Company
Attention: Surety
1221 Avenue of the Americas, 18th Floor
New York, NY 10020

You may contact the Texas Department of Insurance to obtain information on companies, coverages, rights or complaints at:

1-800-252-3439

You may write the

Texas Department of Insurance
PO Box 149104
Austin, TX 78714-9104
FAX# (512) 490-1007

Web: http://www.tdi. texas.gov

E-mail: ConsumerProtection@tdi. texas.gov

PREMIUM OR CLAIM DISPUTES: Should you have a dispute concerning your premium or about a claim you should contact the company first. If the dispute is not resolved, you may contact the Texas Department of Insurance.

ATTACH THIS NOTICE TO YOUR POLICY: This notice is for information only and does not become a part or condition of the attached document.

AVISO IMPORTANTE

Para obtener informacion o para someter una queja:
Usted puede llamar al numero de telefono de la compania para informacion o para someter una queja al:

1-877-676-7575

Usted tambien puede escribir a:

Lexon Insurance Company
Attention: Surety
1221 Avenue of the Americas, 18th Floor
New York, NY 10020

Puede communicarse con el Departamento de Seguros de Texas para obtener informacion acerca de companias, coberturas, derechos o quejas al:

1-800-252-3439

Puede escribir al

Departamento de Seguros de Texas
PO Box 149104
Austin, TX 78714-9104
FAX# (512) 475-1771

Web: http://www.tdi. texas.gov

E-mail: ConsumerProtection@tdi. texas.gov

DISPUTAS SOBRE PRIMAS O RECLAMOS: Si tiene una disputa concerniente a su prima o a un reclamo, debe comunicarse con la compania primero. Si no se resuelve la disputa, puede entonces comunicarse con el departamento (TDI).

UNA ESTE AVISO A SU POLIZA: Este aviso es solo para proposito de informacion y no se convierte en parte o condicion del documento adjunto.

PROVIDED FURTHER, that the said Surety, for value received hereby stipulates and agrees that no change, extension of time, alteration or addition to the terms of the contract or to WORK to be performed thereunder or the SPECIFICATIONS accompanying the same shall in any way affect its obligation on this BOND, and it does hereby waive notice of any such change, extension of time, alteration or addition to the terms of the contract or to the WORK or to the SPECIFICATIONS.

PROVIDED, FURTHER, that no final settlement between the OWNER and the Principal shall abridge the right of any beneficiary hereunder, whose claim may be unsatisfied.

IN WITNESS WHEREOF, this instrument is executed in 4 counterparts, each one of which shall be deemed an original, this the _____ day of _____.

ATTEST:

Patterson Professional Services, LLC
(Principal)

_____ By David Patterson (s)
(Principal Secretary)

(SEAL)

Sarah Patterson
(Witness as to Principal)

P.O. Box 910, Collinsville, TX 76233
(Address)

P.O. Box 910, Collinsville, TX 76233
(Address)

ATTEST:

Lexon Insurance Company
(Surety)

_____ By Chandlee Nazzal
(Witness as to Surety) Lorena Gutierrez (Attorney in Fact) Chandler Nazzal

5930 Preston View Blvd., Suite 200, Dallas, TX 75240
(Address)

10002 Shelbyville Rd, Suite 100, Louisville, KY 40223
(Address)

NOTE: Date of BOND must not be prior to date of Contract. If PRINCIPAL/CONTRACTOR is Partnership, all partners should execute BOND.

Bond No. LICX1204081

PERFORMANCE BOND

KNOW ALL MEN BY THESE PRESENTS that:

Patterson Professional Services, LLC
(Name of Contractor or Company)

P.O. Box 910, Collinsville, TX 76233
(Address)

a Limited Liability Company hereinafter called Principal, and

Lexon Insurance Company
(Name of Surety Company)

10002 Shelbyville Rd, Suite 100, Louisville, KY 40223
(Address)

hereinafter called Surety, are held and firmly bound unto

Johnson County on behalf of Johnson County Special Utility District
(Name of Grant Recipient)

740 FM 3048, Joshua, TX 76058
(Grant Recipient's Address)

hereinafter called OWNER, in the penal sum of $ Two Hundred Thirty Thousand Seven Hundred Eleven Dollars and 25/100ths 230,711.25 Dollars ($ ____) in lawful money of the United States, for the payment of which sum well and truly to be made we bind ourselves, successors, and assigns, jointly and severally, firmly in these presents.

THE CONDITION OF THIS OBLIGATION is such that whereas, the Principal entered into a certain contract with the OWNER dated the _____ day of _____, a copy of which is hereto attached and made a part hereof for the construction of:

Waterline Improvement Project FM 4 & CR 1121-TxCDBG 7218250

NOW THEREFORE, if the Principal shall well, truly and faithfully perform its duties in all the undertakings, covenants, terms, conditions, and agreements of said contract during the original term thereof, and any extensions thereof which may be granted by the OWNER, with or without notice to the Surety and during the one year guaranty period, and if he shall satisfy all claims and demands incurred under such contract, and shall fully indemnify and save harmless the OWNER from all costs and damages which it may suffer by reason of failure to do so, and shall reimburse and repay the OWNER all outlay and expense which the OWNER may incur in making good any default, then this obligation shall be void, otherwise to remain in full force and effect.

IN WITNESS WHEREOF, this instrument is executed in 4 counter-parts, each on of (Number) which shall be deemed an original, this the _____ day of _____.

ATTEST:

Patterson Professional Services, LLC
(Principal)

_____ By David Patterson (s)
(Principal Secretary)

(SEAL)

Sarah Patterson
(Witness as to Principal)

P.O. Box 910, Collinsville, TX 76233
(Address)

P.O. Box 910, Collinsville, TX 76233
(Address)

ATTEST:

Lexon Insurance Company
(Surety)

_____ By _____
(Witness as to Surety Lorena Gutierrez

(Attorney in Fact) Chandler Nazzal

5930 Preston View Blvd., Suite 200, Dallas, TX 75240
(Address)

10002 Shelbyville Rd, Suite 100, Louisville, KY 40223
(Address)

NOTE: Date of BOND must not be prior to date of Contract. If CONTRACTOR is Partnership, all partners should execute BOND.

Bond No. LICX1204081

PAYMENT BOND

KNOW ALL MEN BY THESE PRESENTS that:

Patterson Professional Services, LLC
(Name of Contractor or Company)

P.O. Box 910, Collinsville, TX 76233
(Address)

a Limited Liability Company, hereinafter called Principal,
(Corporation / Partnership)

and Lexon Insurance Company
(Name of Surety Company)

10002 Shelbyville Rd, Suite 100, Louisville, KY 40223
(Address)

hereinafter called Surety, are held and firmly bound unto

Johnson County on behalf of Johnson County Special Utility District
(Name of Recipient)

740 FM 3048, Joshua, TX 76058
(Recipient's Address)

hereinafter called OWNER, in the penal sum of $ Two Hundred Thirty Thousand Seven Hundred Eleven Dollars and 25/100ths

Dollars, $ 230,711.25 in lawful money of the United States, for this payment of which sum well and truly to be made, we bind ourselves, successors, and assigns, jointly and severally, firmly by these presents.

THE CONFIDENTIALITY OF THIS OBLIGATION is such that whereas, the Principal entered into a certain contract with the OWNER, dated the ___ day of _____, a copy of which is hereto attached and made a part hereof for the construction of:

Waterline Improvement Project FM 4 & CR 1121-TxCDBG 7218250
(Project Name)

NOW, THEREFORE, if the Principal shall promptly make payment to all persons, firms, SUB-CONTRACTORS, and corporations furnishing materials for or performing labor in the prosecution of the WORK provided for in such contract, and any authorized extension or modification thereof, including all amounts due for materials, lubricants, oil, gasoline, coal and coke, repairs on machinery, equipment and tools, consumed or used in connection with the construction of such WORK, and all insurance premiums on said WORK, and for all labor, performed in such WORK whether by SUB-CONTRACTOR or otherwise, then this obligation shall be void; otherwise to remain in full force and effect.

PROVIDED, FURTHER, that the said Surety, for value received hereby stipulates and agrees that no change, extension of time, alteration or addition to the terms of the contract or to WORK to be performed thereunder or the SPECIFICATIONS accompanying the same shall in any way affect its obligation on this BOND, and it does hereby waive notice of any such change, extension of time, alteration or addition to the terms of the contract or to the WORK or to the SPECIFICATIONS.

PROVIDED, FURTHER, that no final settlement between the OWNER and the CONTRACTOR shall abridge the right of any beneficiary hereunder, whose claim may be unsatisfied.

EJCDC
ENGINEERS JOINT CONTRACT DOCUMENTS COMMITTEE

NOTICE TO PROCEED

Owner:	**Johnson County on behalf of Johnson County Special Utility District**	Owner's Contract No.:	
Contractor:	**Patterson Professional Services, LLC**	Contractor's Project No.:	
Engineer:	**Daniel & Brown Inc.**	Engineer's Project No.:	**WL-CR1121 FM 4 TxCDBG-0119**
Project:	**Waterline Improvement Project FM 4 & CR 1121-TxCDBG 7218250**	Contract Name:	
		Effective Date of Contract:	

TO CONTRACTOR:

Owner hereby notifies Contractor that the Contract Times under the above Contract will commence to run on May 19, 2021. *[see Paragraph 4.01 of the General Conditions]*

On that date, Contractor shall start performing its obligations under the Contract Documents. No Work shall be done at the Site prior to such date. In accordance with the Agreement, the number of days to achieve Substantial Completion is 120, and the number of days to achieve readiness for final payment is 150.

Before starting any Work at the Site, Contractor must comply with the following:
[Note any access limitations, security procedures, or other restrictions]

Owner: Johnson County on behalf of Johnson County Special Utility District

By: _____
Authorized Signature

Title: _____

Date Issued: _____

Copy: Engineer

_____
(The Contractor)

By Mark Patterson
Title President

Johnson County
(County)

By_____

_____

Title_____

Corporate Certifications

I, David Patterson, certify that I am the Secretary of the corporation named as Contractor herein; that Mark Patterson, who signed this Agreement on behalf of the Contractor, was then President of said corporation; that said Agreement was duly signed for and in behalf of said corporation by authority of its governing body, and is within the scope of its corporate powers.

Corporate
Seal

_____
(Corporate Secretary)

CONSTRUCTION CONTRACT

THIS AGREEMENT made this the _____ day of _____, _____, by and between _____ (*a corporation organized and existing under the laws of the State of* Texas) Patterson Professional Services, LLC hereinafter called the "*Contractor*", and Johnson County on behalf of Johnson County Special Utility District hereinafter called the "*County*."

WITNESSETH, that the Contractor and the County for the considerations stated herein mutually agree as follows:

ARTICLE 1. Statement of Work. The Contractor shall furnish all supervision, technical personnel, labor, materials, machinery, tools, equipment and services, including utility and transportation services, and perform and complete all work required for the construction of the Improvements embraced in the Project; namely, waterline improvement for the Johnson County Texas Community Development Block Grant Program 2017/2018 distributed by the Texas department of agriculture project, all in strict accordance with the contract documents including all addenda thereto, numbered N/A, dated N/A and N/A, all as prepared by Daniel & Brown Inc. acting and in these contract documents preparation, referred to as the "*Engineer*".

ARTICLE 2. The Contract Price. The County will pay the Contractor for the performance of the Contract in current funds, for the total quantities of work performed at the *unit prices* stipulated in the Bid for the several respective items of work completed subject to additions and deductions as provided by Standard General Conditions, Part 1, Item 6 hereof.

ARTICLE 3. The Contract. The executed contract documents shall consist of the following components:

a. This Agreement (pgs. 1-3)
b. Addenda
c. Invitation for Bids
d. Instructions to Bidders
e. Signed Copy of Bid
f. General Conditions, Part I
g. Special Conditions
h. Technical Specifications
i. Drawings (*as listed in the Schedule of Drawings*)
j. [Add any applicable documents]

ARTICLE 4. Performance. Work, in accordance with the Contract dated _____, _____, shall commence on or before _____, _____, and Contractor shall complete the WORK within 120 consecutive calendar days thereafter. The date of completion of all WORK is therefore _____, _____.

This Agreement, together with other documents enumerated in this ARTICLE 3, which said other documents are as fully a part of the Contract as if hereto attached or herein repeated, forms the Contract between the parties hereto. In the event that any provision in any component part of this Contract conflicts with any provision of any other component part, the provision of the component part first enumerated in this ARTICLE 3 shall govern, except as otherwise specifically stated.

IN WITNESS WHEREOF, the parties hereto have caused this Agreement to be executed in *triplicate* original copies on the day and year first above written.

EJCDC
ENGINEERS JOINT CONTRACT DOCUMENTS COMMITTEE

NOTICE OF AWARD

Date of Issuance:	March 22, 2021		
Owner:	**Johnson County on behalf of Johnson County Special Utility District**	Owner's Contract No.:	
Engineer:	**Daniel & Brown Inc.**	Engineer's Project No.:	**WL-CR1121 FM4 TxCDBG-0119**
Project:	**Waterline Improvement Project FM 4 & CR 1121-TxCDBG 7218250**	Contract Name:	
Bidder:	**Patterson Professional Services, LLC**		
Bidder's Address:	**P.O. Box 910 Collinsville, TX, 76233**		

TO BIDDER:

You are notified that Owner has accepted your Bid dated February 4, 2021 for the above Contract, and that you are the Successful Bidder and are awarded a Contract for:

Waterline Improvement Project FM 4 & CR 1121-TxCDBG 7218250.
[describe Work, alternates, or sections of Work awarded]

The Contract Price of the awarded Contract is: $ 230,711.25
[note if subject to unit prices, or cost-plus]

[4] unexecuted counterparts of the Agreement accompany this Notice of Award

☐ a set of the Drawings will be delivered separately from the other Contract Documents.

You must comply with the following conditions precedent within 15 days of the date of receipt of this Notice of Award:

1. Deliver to Owner [4] counterparts of the Agreement, fully executed by Bidder.
2. Deliver with the executed Agreement(s) the Contract security *[e.g., performance and payment bonds]* and insurance documentation as specified in the Instructions to Bidders, General Conditions and Supplemental General Conditions.
3. Other conditions precedent (if any):

Failure to comply with these conditions within the time specified will entitle Owner to consider you in default, annul this Notice of Award, and declare your Bid security forfeited.

Within ten days after you comply with the above conditions, Owner will return to you one fully executed counterpart of the Agreement, together with any additional copies of the Contract Documents as indicated in Paragraph 2.02 of the General Conditions.

Owner: **Johnson County on behalf of Johnson County Special Utility District**

By: [signature]
Authorized Signature

Title: Johnson County Judge

Copy: Engineer

(This page is intentionally left blank)

End of Section

Credit References

Company Name/Information	Address	phone number
Patterson Professional Services,LLC Tax ID: 45-3049103	9963 S US Hwy 377 Collinsville, TX 76233 Present at this address 2 years	903.429.3008 **Contact Name**: Lesy Gutierrez Sarah Patterson
Bank Information	**Address**	**phone number**
Independent Bank	715 US Hwy 377 Collinsville, TX 76233	903.429.9400 **Contact Name**: Kevin Hale checking account
Business References.1	**Address**	**phone number**
Ferguson Waterworks	2650 S Pipeline Road Euless, TX 76040	972.434.2600 Contact Name: Janet Addamz janet.addamz@ferguson.com
Business References.2	**Address**	**phone number**
National Wholesale Supply	4009 Texoma Parkway Sherman, TX 75090	903.771.2821 **Contact Name**: Chris Cornett c.cornett@nationalwholesale.biz
Business References.3	**Address**	**phone number**
Winnelson	PO Box 105525 Atlanta, GA 30348	940.665.1400 Contact Name: Rick Elliot rbelliot@winnelson.com

SCHEDULE D

Proposed Subcontractors: None

Proposed Suppliers

Ferguson Waterworks, 10077 W. University Dr., McKinney, TX 75070
972.434.2600
Taylor Griggs, 832.724.9284, taylor.griggs@ferguson.com

Project References

Project Name	Owner's Contact Person	Design Engineer
Celina Willock Hills Lift Station	Alan Fourmentin 142 N Ohio, Celina, TX 972-382-2682 x 4000	Lance Klement Garver, USA 214-619-9047
Sadler Wastewater Improvements	John White PO Box 543, Sadler, TX 903-436-7432	Carlos Aguilar Freeman-Millican 214-952-0234
Aubrey Wastewater Improvements	Kenny Faulkner 107 S Main, Aubrey, TX 940-465-1502	Lee Allison Allison Engineering 940-380-9431
Lindsay Waterline Improvements	Betsy Fleitman 608 Ash St, Lindsay, TX 940-665-4455	Carlos Aguilar Freeman-Millican 214-952-0234

Project Name	Owner's Contact Person	Design Engineer
Callisburg - Horseman's Ranch Water System Rehab & Waterline Ext	Frances West 59 Campbell St, Callisburg, TX 940-665-9809	Carlos Aguilar Freeman-Millican 214-952-0234
Italy Wastewater Improvements	Shawn Holden 161 W Main, Italy, TX 214-399-1843	Carlos Aguilar Freeman-Millican 214-952-0234
Midway Industrial Park Fire Suppression Improvements	Datavault J.V. 2741 Fallon Drive Sherman, TX 75091	Tom Pruitt City of Sherman 903-892-7212
Muenster Sewer System Improvements	Stan Endres 400 N. Main, Muenster, TX 940-759-2236	David Perkins KSA Engineers 972-542-2995

SCHEDULE C

EQUIPMENT LIST - Company Owned

Item	Serial No	Purchase Date	Condition	Aquired Value
2002 JD Tractor	Tractor	2014	Good	$9,240.00
2014 Pipe Hunter Jetter	1TP9P71620EP391961	2014	Good	$43,927.65
Cutoff Machine	182105448	2017	New	$1,167.84
Backhoe JD 410G	902903	2014	Good	$20,000.00
2007 Peterbilt 385 Dump Truck	1NFGLU9X17D685263	2007	Good	$85,991.50
2017 CAT Backhoe/Loader 420F	OHWC01903	2017	New	$91,443.69
2017 CAT Excavator 315F L	OTDY10123	2017	New	$164,500.00
2018 CAT Excavator 308 ECR	OFJX09980	2017	New	$101,950.00
2020 303.5E Mini Excavator	0JWY06517	2020	New	$39,250.00
2020 289 Cab Skid Steer	0JX902355	2020	New	$70,850.00
2019 Big Tex 14GP	20BK5FUR Trailer	2019	New	6,223.74
Pow-R Mole Boring Machine	Model PD-4	2018	New	$14,474.04

FM 897 North Waterline Relocation	Address: 14101 E FM 1396 Honey Grove, TX 75446	Company: Daniel & Brown Phone: 972-784-7777	6/15/2018	Relocation	Complete	$212,552.00
Town of Little Elm Shell Beach & Cottonwood Lift Station Improvements	Name: David Hillock, Mayor Address: 100 W Eldorado Pkwy Little Elm, TX 75068	Name: Daniel Huffines Company: Freese & Nichols Phone: 972-624-9201	2/19/2018	2 Lift Stations Improvements	Complete	$602,180.00
East Cedar Creek FWSD Lift Station No. 19 Replacement	Name: Bill Goheen, GM Address: 115 Hammer Rd Gun Barrel City, TX 75156	Name: David Perkins Company: KSA Engineering Phone: 972-542-2995	5/14/2018	Lift Station Replacement	Complete	$174,461.50
Bois D'Arc MUD FM 897 South Waterline Relocation	Name: Mark Newhouse, GM Address: 14101 E FM 1396 Honey Grove, TX 75446	Name: Eddie Daniel Company: Daniel & Brown Phone: 972-784-7777	10/3/2018	Waterline Relocation	Complete	$257,095.00
White Shed WSC CR 2610 & CR 2680 Waterline Relocation	Name: Ronald Farris - GM Address: P.O. Box 80 Ivanhoe, TX 75447	Name: Eddie Daniel Company: Daniel & Brown Phone: 972-784-7777		Waterline Relocation	Complete	$112,470.00
City of Forney Weaver Street Lift Station	Name: City of Forney Address: 101 E Main Forney, TX 75126	Name: Mark Hill Company: Freeman-Millican Phone: 972-335-3214	1/28/2019	Lift Station Rehab	Complete	$192,467.00
City of Pottsboro Sewer Improvements TxCDBG #7217370	Name: City of Pottsboro Address: 528 FM 120 E Pottsboro, TX 75076	Name: Carlos Aguilar Company: Freeman-Millican Phone: 214-503-0555	1/25/2019	Sewer Improvements	Complete	$127,226.70
City of Bowie East Lift Station Rehabilitation	Name: City of Bowie Address: 304 Lindsay St Bowie, TX, 76230	Name: Kevin Vanhoozier Company: Hayter Engineering Phone: 903-785-0303	7/7/2019	Lift Station Rehabilitation	Complete	$172,210.00
GTUA for City of Ector WWTP Disinfection	Name: Drew Satterwhite - GTUA Address: 5100 Airport Drive	Name: Scott Maynor Company: Cobb Fendley	2/18/2019	WWTP Disinfection	Complete	$314,075.50

Relocation	Phone: 903-564-3594	Phone:				
Muenster Sewer System Improvements	Name: Stan Endres Address: 400 N. Main, Muenster, TX Phone: 940-759-2236	Name: David Perkins Company: KSA Engineers Phone: 972-542-2995	10/18/2017	Sewer System Improvements	Complete	$270,883.00
Sheppard AFB-Texoma Repair Lodging Facilities - DEMO	Name: Sheppard AFB Address: 8206 J Avenue, Bldg 1662 Phone: Sheppard AFB, TX	Name: Charles Rollison Company: Weil Construction Phone: 505-373-7532	9/30/2017	Demolition & removal of 5 cabins & install new water/sewer lines	Complete	$34,168.00
Sheppard AFB-Texoma Repair Lodging Facilities - REPAIRS	Name: Sheppard AFB Address: 8206 J Avenue, Bldg 1662 Phone: Sheppard AFB, TX	Name: Charles Rollison Company: Weil Construction Phone: 505-373-7532	9/30/2017	Repair & Rehab 30 Cabins	Complete	$242,400.00
City of Honey Grove Lift Station Replacement	Name: Claude Caffee, Mayor Address: 633 N 6th St, Honey Grove, TX Phone: 903-378-3033	Name: David Perkins Company: KSA Engineers Phone: 972-542-2995	11/15/2017	Lift Station Replacement	Complete	$186,061.10
City of Krum Lift Station Rehab (3)	Name: Terri Wilson, Mayor Address: 146 W McCart, Krum,TX 76249 Phone: 940-368-8926	Name: Lori Lusk Company: MLA Consulting Phone: 972-578-9300	3/30/2014	Rehab 3 Lift Stations	Complete	$225,000.00
City of Tom Bean Holcombville Area Water System Improvements	Name: Sherry Howard, Mayor Address: 201 S Britton St Tom Bean, TX 75489	Name: Don Wortham Company: Cobb Fendley Phone: 972-385-3214	1/25/2018	Installation of Water System Improvements	Complete	$146,117.60
GTUA/City of Ector WWTP Lagoon Outlet Weir Improvements	Name: Drew Satterwhite/GTUA Address: 5100 Airport Drive Dennison, TX 75020	Name: Carlos Aguilar Company: Freeman-Millican Phone: 214-503-0555	2/5/2018	Installation of 4 Weir Plates	Complete	$14,000.00
Black Rock WSC 6" Water Dist Line	Name: Ken Coffelt, President Address: 5901 New Hope Rd Aubrey, TX 76227	Name: Kerry Maroney Company: Biggs & Mathews Phone: 940-766-0156	12/19/2017	Installation of Water Dist Line	Complete	$153,140.00
Country Club Village Water & Sewer Line Installation	Name: Carmen Investments, Inc Address: 13069 St John Rd Pilot Point, TX 76258	Name: Lawrence Holdorf Company: Allison Engineering Phone: 940-380-9453	12/8/2017	Installation of Water/Sewer/Storm Drainage Systems	Complete	$222,435.32
Diana SUD WWTP Disinfection System Improvements	Name: Susan Whitfield, GM Address: P.O. Box 74 Diana, TX 75640	Name: Jeremy Orr Company: KSA Engineering Phone: 903-233-7700	1/29/2018	WWTP Disinfection System Improvements	Complete	$516,738.00
Bois D'Arc MUD	Name: Mark Newhouse, GM	Name: Eddie Daniel		Waterline		

SCHEDULE B - Previous Experience

Project Name	Owner's Contact Person	Design Engineer	Completion Date	Type of Work	Status	Cost of Work
Celina Willock Hills Lift Station	Name: Alan Fourmentin Address: 142 N Ohio, Celina, TX Phone: 972-382-2682 x 4000	Name: Lance Klement Company: Garver, USA Phone: 214-619-9047	11/3/2016	Installation of Sewer Lift Station	Complete	$70,000.00
Sadler Wastewater Improvements	Name: John White Address: PO Box 543, Sadler, TX Phone: 903-436-7432	Name: Carlos Aguilar Company: Freeman-Millican Phone: 214-952-0234	4/28/2016	Installation of Sewer Lift Station	Complete	$298,951.88
Aubrey Water System Improvements	Name: Kenny Faulkner Address: 107 S Main, Aubrey, TX Phone: 940-465-1502	Name: Lee Allison Company: Allison Engineering Phone: 940-380-9431	10/1/2015	Installation of 1,965 l.f. of 8" Water Line	Complete	$272,044.44
Lindsay Waterline Rehab & Waterline Ext	Name: Betsy Fleitman Address: 608 Ash St, Lindsay, TX Phone: 940-665-9809	Name: Carlos Aguilar Company: Freeman-Millican Phone: 214-952-0234	3/20/2015	Installation of 4,852 l.f. of & Interconnection	Complete	$221,046.12
Callisburg-Horseman's Ranch Water System Rehab & Waterline Ext	Name: Francis West Address: 59 Campbell St, Callisburg, TX Phone: 940-665-9809	Name: Carlos Aguilar Company: Freeman-Millican Phone: 214-952-0234	4/9/2016	Water System Rehab Waterline Extension & Interconnection	Complete	$490,000.00
Italy Wastewater Improvements	Name: Shawn Holden Address: 161 W Main, Italy, TX Phone: 214-399-1843	Name: 817-719-0372 Company: Freeman-Millican Phone: 214-952-0234	4/24/2017	Installation of 2 Sewer Lift Stations	Complete	$231,882.00
Aubrey Wastewater Improvements	Name: Kenny Faulkner Address: 107 S Main, Aubrey, TX Phone: 940-465-1502	Name: Andrew Mata Company: Birkhoff Hendricks Carter Phone: 214-769-9079	6/15/2017	Wastewater Improvements	Complete	$304,051.00
Midway Industrial Park Fire Suppression Improvements	Name: Datavault J.V. Address: 2741 Fallon Drive Phone: Sherman, TX 75091	Name: Tom Pruitt Company: City of Sherman Phone: 903-892-7212	7/7/2017	Installation of Fire Suppression Improvements	Complete	$46,000.00
NW Grayson WCD No 1 Liberty Rd Water Line & Metering Facilities	Name: Karen Bomar Address: 1763 FM 901, Sadler, TX Phone: 903-821-3029	Name: Kerry Maroney Company: Biggs & Matthews Phone: 940-766-0156	8/1/2017	Installation of Water Line & Metering Facility	Complete	$96,781.50
Holiday Ford Whitesboro Sewer Line	Name: Holiday Ford Whitesboro Address: 1009 Hwy 82 West, Whitesboro	Name: Company:	9/22/2017	Sewer Line Relocation	Complete	$106,100.00

SCHEDULE A

CURRENT EXPERIENCE

Project Name	Owner's Contact Person	Design Engineer	Contract Date	Type of Work	Status	Cost of Work
GTUA for City of Gunter Wastewater Treatment Plant Replacement	Name: Drew Satterwhite - GTUA Address: 5100 Airport Drive Denison, TX 75020	Name: Scott Maynor Company: Cobb Fendley Phone: 972-335-3214	9/18/2018	WWTP Replacement	85% Complete	$1,814,097.50
GTUA for City of Paradise Waterline/GST	Name: Drew Satterwhite - GTUA Address: 5100 Airport Drive Denison, TX 75020	Name: Justin Angel Company: Perkins Engineering Phone: 817-719-0372	2/1/2020	Waterline/GST	85% Complete	$1,064,070.00
City of Palmer Headworks Station	Name: City of Palmer Address: 113 Jefferson Palmer, TX 75152	Name: Mark Hill Company: Freeman-Millican Phone: 972-335-3214	7/21/2020	Sewer	40% Complete	$265,000.00
City of Wolfe City Lift Station & Force Main Improvements	Name: City of Wolfe City Address: 101 W Main Street Wolfe City, TX 75496	Name: David Perkins Company: KSA Engineers Phone: 972-542-2995		Lift Station/Force Main	0% Complete	$741,000.00

8.02 *Coordination*

A. If Owner intends to contract with others for the performance of other work at or adjacent to the Site, to perform other work at or adjacent to the Site with Owner's employees, or to arrange to have utility owners perform work at or adjacent to the Site, the following will be set forth in the Supplementary Conditions or provided to Contractor prior to the start of any such other work:

1. the identity of the individual or entity that will have authority and responsibility for coordination of the activities among the various contractors;

2. an itemization of the specific matters to be covered by such authority and responsibility; and

3. the extent of such authority and responsibilities.

B. Unless otherwise provided in the Supplementary Conditions, Owner shall have sole authority and responsibility for such coordination.

8.03 *Legal Relationships*

A. If, in the course of performing other work at or adjacent to the Site for Owner, the Owner's employees, any other contractor working for Owner, or any utility owner for whom the Owner is responsible causes damage to the Work or to the property of Contractor or its Subcontractors, or delays, disrupts, interferes with, or increases the scope or cost of the performance of the Work, through actions or inaction, then Contractor shall be entitled to an equitable adjustment in the Contract Price or the Contract Times, or both. Contractor must submit any Change Proposal seeking an equitable adjustment in the Contract Price or the Contract Times under this paragraph within 30 days of the damaging, delaying, disrupting, or interfering event. The entitlement to, and extent of, any such equitable adjustment shall take into account information (if any) regarding such other work that was provided to Contractor in the Contract Documents prior to the submittal of the Bid or the final negotiation of the terms of the Contract. When applicable, any such equitable adjustment in Contract Price shall be conditioned on Contractor assigning to Owner all Contractor's rights against such other contractor or utility owner with respect to the damage, delay, disruption, or interference that is the subject of the adjustment. Contractor's entitlement to an adjustment of the Contract Times is conditioned on such adjustment being essential to Contractor's ability to complete the Work within the Contract Times.

B. Contractor shall take reasonable and customary measures to avoid damaging, delaying, disrupting, or interfering with the work of Owner, any other contractor, or any utility owner performing other work at or adjacent to the Site. If Contractor fails to take such measures and as a result damages, delays, disrupts, or interferes with the work of any such other contractor or utility owner, then Owner may impose a set-off against payments due to Contractor, and assign to such other contractor or utility owner the Owner's contractual rights against Contractor with respect to the breach of the obligations set forth in this paragraph.

C. When Owner is performing other work at or adjacent to the Site with Owner's employees, Contractor shall be liable to Owner for damage to such other work, and for the reasonable direct delay, disruption, and interference costs incurred by Owner as a result of Contractor's failure to take reasonable and customary measures with respect to Owner's other work. In response to such damage, delay, disruption, or interference, Owner may impose a set-off against payments due to Contractor.

Drawings and other submittals related to the Work designed or certified by such professional, if prepared by others, shall bear such professional's written approval when submitted to Engineer.

C. Owner and Engineer shall be entitled to rely upon the adequacy, accuracy, and completeness of the services, certifications, or approvals performed by such design professionals, provided Owner and Engineer have specified to Contractor all performance and design criteria that such services must satisfy.

D. Pursuant to this paragraph, Engineer's review and approval of design calculations and design drawings will be only for the limited purpose of checking for conformance with performance and design criteria given and the design concept expressed in the Contract Documents. Engineer's review and approval of Shop Drawings and other submittals (except design calculations and design drawings) will be only for the purpose stated in Paragraph 7.16.D.1.

E. Contractor shall not be responsible for the adequacy of the performance or design criteria specified by Owner or Engineer.

ARTICLE 8 – OTHER WORK AT THE SITE

8.01 *Other Work*

A. In addition to and apart from the Work under the Contract Documents, the Owner may perform other work at or adjacent to the Site. Such other work may be performed by Owner's employees, or through contracts between the Owner and third parties. Owner may also arrange to have third-party utility owners perform work on their utilities and facilities at or adjacent to the Site.

B. If Owner performs other work at or adjacent to the Site with Owner's employees, or through contracts for such other work, then Owner shall give Contractor written notice thereof prior to starting any such other work. If Owner has advance information regarding the start of any utility work at or adjacent to the Site, Owner shall provide such information to Contractor.

C. Contractor shall afford each other contractor that performs such other work, each utility owner performing other work, and Owner, if Owner is performing other work with Owner's employees, proper and safe access to the Site, and provide a reasonable opportunity for the introduction and storage of materials and equipment and the execution of such other work. Contractor shall do all cutting, fitting, and patching of the Work that may be required to properly connect or otherwise make its several parts come together and properly integrate with such other work. Contractor shall not endanger any work of others by cutting, excavating, or otherwise altering such work; provided, however, that Contractor may cut or alter others' work with the written consent of Engineer and the others whose work will be affected.

D. If the proper execution or results of any part of Contractor's Work depends upon work performed by others under this Article 8, Contractor shall inspect such other work and promptly report to Engineer in writing any delays, defects, or deficiencies in such other work that render it unavailable or unsuitable for the proper execution and results of Contractor's Work. Contractor's failure to so report will constitute an acceptance of such other work as fit and proper for integration with Contractor's Work except for latent defects and deficiencies in such other work.

D. If the Contract requires the Contractor to accept the assignment of a contract entered into by Owner, then the specific warranties, guarantees, and correction obligations contained in the assigned contract shall govern with respect to Contractor's performance obligations to Owner for the Work described in the assigned contract.

7.18 *Indemnification*

A. To the fullest extent permitted by Laws and Regulations, and in addition to any other obligations of Contractor under the Contract or otherwise, Contractor shall indemnify and hold harmless Owner and Engineer, and the officers, directors, members, partners, employees, agents, consultants and subcontractors of each and any of them from and against all claims, costs, losses, and damages (including but not limited to all fees and charges of engineers, architects, attorneys, and other professionals and all court or arbitration or other dispute resolution costs) arising out of or relating to the performance of the Work, provided that any such claim, cost, loss, or damage is attributable to bodily injury, sickness, disease, or death, or to injury to or destruction of tangible property (other than the Work itself), including the loss of use resulting therefrom but only to the extent caused by any negligent act or omission of Contractor, any Subcontractor, any Supplier, or any individual or entity directly or indirectly employed by any of them to perform any of the Work or anyone for whose acts any of them may be liable.

B. In any and all claims against Owner or Engineer or any of their officers, directors, members, partners, employees, agents, consultants, or subcontractors by any employee (or the survivor or personal representative of such employee) of Contractor, any Subcontractor, any Supplier, or any individual or entity directly or indirectly employed by any of them to perform any of the Work, or anyone for whose acts any of them may be liable, the indemnification obligation under Paragraph 7.18.A shall not be limited in any way by any limitation on the amount or type of damages, compensation, or benefits payable by or for Contractor or any such Subcontractor, Supplier, or other individual or entity under workers' compensation acts, disability benefit acts, or other employee benefit acts.

C. The indemnification obligations of Contractor under Paragraph 7.18.A shall not extend to the liability of Engineer and Engineer's officers, directors, members, partners, employees, agents, consultants and subcontractors arising out of:

1. the preparation or approval of, or the failure to prepare or approve maps, Drawings, opinions, reports, surveys, Change Orders, designs, or Specifications; or

2. giving directions or instructions, or failing to give them, if that is the primary cause of the injury or damage.

7.19 *Delegation of Professional Design Services*

A. Contractor will not be required to provide professional design services unless such services are specifically required by the Contract Documents for a portion of the Work or unless such services are required to carry out Contractor's responsibilities for construction means, methods, techniques, sequences and procedures. Contractor shall not be required to provide professional services in violation of applicable Laws and Regulations.

B. If professional design services or certifications by a design professional related to systems, materials, or equipment are specifically required of Contractor by the Contract Documents, Owner and Engineer will specify all performance and design criteria that such services must satisfy. Contractor shall cause such services or certifications to be provided by a properly licensed professional, whose signature and seal shall appear on all drawings, calculations, specifications, certifications, and other submittals prepared by such professional. Shop

8. Contractor shall perform the Work in compliance with the requirements and commitments set forth in approved Shop Drawings and Samples, subject to the provisions of Paragraph 7.16.D.4.

E. *Resubmittal Procedures*:

1. Contractor shall make corrections required by Engineer and shall return the required number of corrected copies of Shop Drawings and submit, as required, new Samples for review and approval. Contractor shall direct specific attention in writing to revisions other than the corrections called for by Engineer on previous submittals.

2. Contractor shall furnish required submittals with sufficient information and accuracy to obtain required approval of an item with no more than three submittals. Engineer will record Engineer's time for reviewing a fourth or subsequent submittal of a Shop Drawings, sample, or other item requiring approval, and Contractor shall be responsible for Engineer's charges to Owner for such time. Owner may impose a set-off against payments due to Contractor to secure reimbursement for such charges.

3. If Contractor requests a change of a previously approved submittal item, Contractor shall be responsible for Engineer's charges to Owner for its review time, and Owner may impose a set-off against payments due to Contractor to secure reimbursement for such charges, unless the need for such change is beyond the control of Contractor.

7.17 *Contractor's General Warranty and Guarantee*

A. Contractor warrants and guarantees to Owner that all Work will be in accordance with the Contract Documents and will not be defective. Engineer and its officers, directors, members, partners, employees, agents, consultants, and subcontractors shall be entitled to rely on Contractor's warranty and guarantee.

B. Contractor's warranty and guarantee hereunder excludes defects or damage caused by:

1. abuse, modification, or improper maintenance or operation by persons other than Contractor, Subcontractors, Suppliers, or any other individual or entity for whom Contractor is responsible; or

2. normal wear and tear under normal usage.

C. Contractor's obligation to perform and complete the Work in accordance with the Contract Documents shall be absolute. None of the following will constitute an acceptance of Work that is not in accordance with the Contract Documents or a release of Contractor's obligation to perform the Work in accordance with the Contract Documents:

1. observations by Engineer;

2. recommendation by Engineer or payment by Owner of any progress or final payment;

3. the issuance of a certificate of Substantial Completion by Engineer or any payment related thereto by Owner;

4. use or occupancy of the Work or any part thereof by Owner;

5. any review and approval of a Shop Drawing or Sample submittal;

6. the issuance of a notice of acceptability by Engineer;

7. any inspection, test, or approval by others; or

8. any correction of defective Work by Owner.

provide and to enable Engineer to review the information for the limited purposes required by Paragraph 7.16.D.

2. *Samples*:

   a. Contractor shall submit the number of Samples required in the Specifications.

   b. Contractor shall clearly identify each Sample as to material, Supplier, pertinent data such as catalog numbers, the use for which intended and other data as Engineer may require to enable Engineer to review the submittal for the limited purposes required by Paragraph 7.16.D.

3. Where a Shop Drawing or Sample is required by the Contract Documents or the Schedule of Submittals, any related Work performed prior to Engineer's review and approval of the pertinent submittal will be at the sole expense and responsibility of Contractor.

C. *Other Submittals*: Contractor shall submit other submittals to Engineer in accordance with the accepted Schedule of Submittals, and pursuant to the applicable terms of the Specifications.

D. *Engineer's Review*:

1. Engineer will provide timely review of Shop Drawings and Samples in accordance with the Schedule of Submittals acceptable to Engineer. Engineer's review and approval will be only to determine if the items covered by the submittals will, after installation or incorporation in the Work, conform to the information given in the Contract Documents and be compatible with the design concept of the completed Project as a functioning whole as indicated by the Contract Documents.

2. Engineer's review and approval will not extend to means, methods, techniques, sequences, or procedures of construction or to safety precautions or programs incident thereto.

3. Engineer's review and approval of a separate item as such will not indicate approval of the assembly in which the item functions.

4. Engineer's review and approval of a Shop Drawing or Sample shall not relieve Contractor from responsibility for any variation from the requirements of the Contract Documents unless Contractor has complied with the requirements of Paragraph 7.16.A.3 and Engineer has given written approval of each such variation by specific written notation thereof incorporated in or accompanying the Shop Drawing or Sample. Engineer will document any such approved variation from the requirements of the Contract Documents in a Field Order.

5. Engineer's review and approval of a Shop Drawing or Sample shall not relieve Contractor from responsibility for complying with the requirements of Paragraph 7.16.A and B.

6. Engineer's review and approval of a Shop Drawing or Sample, or of a variation from the requirements of the Contract Documents, shall not, under any circumstances, change the Contract Times or Contract Price, unless such changes are included in a Change Order.

7. Neither Engineer's receipt, review, acceptance or approval of a Shop Drawing, Sample, or other submittal shall result in such item becoming a Contract Document.

exchanged between or among employers at the Site in accordance with Laws or Regulations.

7.15 *Emergencies*

A. In emergencies affecting the safety or protection of persons or the Work or property at the Site or adjacent thereto, Contractor is obligated to act to prevent threatened damage, injury, or loss. Contractor shall give Engineer prompt written notice if Contractor believes that any significant changes in the Work or variations from the Contract Documents have been caused thereby or are required as a result thereof. If Engineer determines that a change in the Contract Documents is required because of the action taken by Contractor in response to such an emergency, a Work Change Directive or Change Order will be issued.

7.16 *Shop Drawings, Samples, and Other Submittals*

A. *Shop Drawing and Sample Submittal Requirements*:

1. Before submitting a Shop Drawing or Sample, Contractor shall have:

a. reviewed and coordinated the Shop Drawing or Sample with other Shop Drawings and Samples and with the requirements of the Work and the Contract Documents;

b. determined and verified all field measurements, quantities, dimensions, specified performance and design criteria, installation requirements, materials, catalog numbers, and similar information with respect thereto;

c. determined and verified the suitability of all materials and equipment offered with respect to the indicated application, fabrication, shipping, handling, storage, assembly, and installation pertaining to the performance of the Work; and

d. determined and verified all information relative to Contractor's responsibilities for means, methods, techniques, sequences, and procedures of construction, and safety precautions and programs incident thereto.

2. Each submittal shall bear a stamp or specific written certification that Contractor has satisfied Contractor's obligations under the Contract Documents with respect to Contractor's review of that submittal, and that Contractor approves the submittal.

3. With each submittal, Contractor shall give Engineer specific written notice of any variations that the Shop Drawing or Sample may have from the requirements of the Contract Documents. This notice shall be set forth in a written communication separate from the Shop Drawings or Sample submittal; and, in addition, in the case of Shop Drawings by a specific notation made on each Shop Drawing submitted to Engineer for review and approval of each such variation.

B. *Submittal Procedures for Shop Drawings and Samples*: Contractor shall submit Shop Drawings and Samples to Engineer for review and approval in accordance with the accepted Schedule of Submittals. Each submittal will be identified as Engineer may require.

1. *Shop Drawings*:

a. Contractor shall submit the number of copies required in the Specifications.

b. Data shown on the Shop Drawings will be complete with respect to quantities, dimensions, specified performance and design criteria, materials, and similar data to show Engineer the services, materials, and equipment Contractor proposes to

2. all the Work and materials and equipment to be incorporated therein, whether in storage on or off the Site; and

3. other property at the Site or adjacent thereto, including trees, shrubs, lawns, walks, pavements, roadways, structures, other work in progress, utilities, and Underground Facilities not designated for removal, relocation, or replacement in the course of construction.

B. Contractor shall comply with all applicable Laws and Regulations relating to the safety of persons or property, or to the protection of persons or property from damage, injury, or loss; and shall erect and maintain all necessary safeguards for such safety and protection. Contractor shall notify Owner; the owners of adjacent property, Underground Facilities, and other utilities; and other contractors and utility owners performing work at or adjacent to the Site, when prosecution of the Work may affect them, and shall cooperate with them in the protection, removal, relocation, and replacement of their property or work in progress.

C. Contractor shall comply with the applicable requirements of Owner's safety programs, if any. The Supplementary Conditions identify any Owner's safety programs that are applicable to the Work.

D. Contractor shall inform Owner and Engineer of the specific requirements of Contractor's safety program with which Owner's and Engineer's employees and representatives must comply while at the Site.

E. All damage, injury, or loss to any property referred to in Paragraph 7.12.A.2 or 7.12.A.3 caused, directly or indirectly, in whole or in part, by Contractor, any Subcontractor, Supplier, or any other individual or entity directly or indirectly employed by any of them to perform any of the Work, or anyone for whose acts any of them may be liable, shall be remedied by Contractor at its expense (except damage or loss attributable to the fault of Drawings or Specifications or to the acts or omissions of Owner or Engineer or anyone employed by any of them, or anyone for whose acts any of them may be liable, and not attributable, directly or indirectly, in whole or in part, to the fault or negligence of Contractor or any Subcontractor, Supplier, or other individual or entity directly or indirectly employed by any of them).

F. Contractor's duties and responsibilities for safety and protection shall continue until such time as all the Work is completed and Engineer has issued a notice to Owner and Contractor in accordance with Paragraph 15.06.B that the Work is acceptable (except as otherwise expressly provided in connection with Substantial Completion).

G. Contractor's duties and responsibilities for safety and protection shall resume whenever Contractor or any Subcontractor or Supplier returns to the Site to fulfill warranty or correction obligations, or to conduct other tasks arising from the Contract Documents.

7.13 *Safety Representative*

A. Contractor shall designate a qualified and experienced safety representative at the Site whose duties and responsibilities shall be the prevention of accidents and the maintaining and supervising of safety precautions and programs.

7.14 *Hazard Communication Programs*

A. Contractor shall be responsible for coordinating any exchange of material safety data sheets or other hazard communication information required to be made available to or

7.09 *Taxes*

A. Contractor shall pay all sales, consumer, use, and other similar taxes required to be paid by Contractor in accordance with the Laws and Regulations of the place of the Project which are applicable during the performance of the Work.

7.10 *Laws and Regulations*

A. Contractor shall give all notices required by and shall comply with all Laws and Regulations applicable to the performance of the Work. Except where otherwise expressly required by applicable Laws and Regulations, neither Owner nor Engineer shall be responsible for monitoring Contractor's compliance with any Laws or Regulations.

B. If Contractor performs any Work or takes any other action knowing or having reason to know that it is contrary to Laws or Regulations, Contractor shall bear all resulting costs and losses, and shall indemnify and hold harmless Owner and Engineer, and the officers, directors, members, partners, employees, agents, consultants, and subcontractors of each and any of them from and against all claims, costs, losses, and damages (including but not limited to all fees and charges of engineers, architects, attorneys, and other professionals and all court or arbitration or other dispute resolution costs) arising out of or relating to such Work or other action. It shall not be Contractor's responsibility to make certain that the Work described in the Contract Documents is in accordance with Laws and Regulations, but this shall not relieve Contractor of Contractor's obligations under Paragraph 3.03.

C. Owner or Contractor may give notice to the other party of any changes after the submission of Contractor's Bid (or after the date when Contractor became bound under a negotiated contract) in Laws or Regulations having an effect on the cost or time of performance of the Work, including but not limited to changes in Laws or Regulations having an effect on procuring permits and on sales, use, value-added, consumption, and other similar taxes. If Owner and Contractor are unable to agree on entitlement to or on the amount or extent, if any, of any adjustment in Contract Price or Contract Times resulting from such changes, then within 30 days of such notice Contractor may submit a Change Proposal, or Owner may initiate a Claim.

7.11 *Record Documents*

A. Contractor shall maintain in a safe place at the Site one printed record copy of all Drawings, Specifications, Addenda, Change Orders, Work Change Directives, Field Orders, written interpretations and clarifications, and approved Shop Drawings. Contractor shall keep such record documents in good order and annotate them to show changes made during construction. These record documents, together with all approved Samples, will be available to Engineer for reference. Upon completion of the Work, Contractor shall deliver these record documents to Engineer.

7.12 *Safety and Protection*

A. Contractor shall be solely responsible for initiating, maintaining, and supervising all safety precautions and programs in connection with the Work. Such responsibility does not relieve Subcontractors of their responsibility for the safety of persons or property in the performance of their work, nor for compliance with applicable safety Laws and Regulations. Contractor shall take all necessary precautions for the safety of, and shall provide the necessary protection to prevent damage, injury, or loss to:

1. all persons on the Site or who may be affected by the Work;

O. Nothing in the Contract Documents:

1. shall create for the benefit of any such Subcontractor, Supplier, or other individual or entity any contractual relationship between Owner or Engineer and any such Subcontractor, Supplier, or other individual or entity; nor

2. shall create any obligation on the part of Owner or Engineer to pay or to see to the payment of any money due any such Subcontractor, Supplier, or other individual or entity except as may otherwise be required by Laws and Regulations.

7.07 *Patent Fees and Royalties*

A. Contractor shall pay all license fees and royalties and assume all costs incident to the use in the performance of the Work or the incorporation in the Work of any invention, design, process, product, or device which is the subject of patent rights or copyrights held by others. If a particular invention, design, process, product, or device is specified in the Contract Documents for use in the performance of the Work and if, to the actual knowledge of Owner or Engineer, its use is subject to patent rights or copyrights calling for the payment of any license fee or royalty to others, the existence of such rights shall be disclosed by Owner in the Contract Documents.

B. To the fullest extent permitted by Laws and Regulations, Owner shall indemnify and hold harmless Contractor, and its officers, directors, members, partners, employees, agents, consultants, and subcontractors from and against all claims, costs, losses, and damages (including but not limited to all fees and charges of engineers, architects, attorneys, and other professionals, and all court or arbitration or other dispute resolution costs) arising out of or relating to any infringement of patent rights or copyrights incident to the use in the performance of the Work or resulting from the incorporation in the Work of any invention, design, process, product, or device specified in the Contract Documents, but not identified as being subject to payment of any license fee or royalty to others required by patent rights or copyrights.

C. To the fullest extent permitted by Laws and Regulations, Contractor shall indemnify and hold harmless Owner and Engineer, and the officers, directors, members, partners, employees, agents, consultants and subcontractors of each and any of them from and against all claims, costs, losses, and damages (including but not limited to all fees and charges of engineers, architects, attorneys, and other professionals and all court or arbitration or other dispute resolution costs) arising out of or relating to any infringement of patent rights or copyrights incident to the use in the performance of the Work or resulting from the incorporation in the Work of any invention, design, process, product, or device not specified in the Contract Documents.

7.08 *Permits*

A. Unless otherwise provided in the Contract Documents, Contractor shall obtain and pay for all construction permits and licenses. Owner shall assist Contractor, when necessary, in obtaining such permits and licenses. Contractor shall pay all governmental charges and inspection fees necessary for the prosecution of the Work which are applicable at the time of the submission of Contractor's Bid (or when Contractor became bound under a negotiated contract). Owner shall pay all charges of utility owners for connections for providing permanent service to the Work

E. Owner may require the replacement of any Subcontractor, Supplier, or other individual or entity retained by Contractor to perform any part of the Work. Owner also may require Contractor to retain specific replacements; provided, however, that Owner may not require a replacement to which Contractor has a reasonable objection. If Contractor has submitted the identity of certain Subcontractors, Suppliers, or other individuals or entities for acceptance by Owner, and Owner has accepted it (either in writing or by failing to make written objection thereto), then Owner may subsequently revoke the acceptance of any such Subcontractor, Supplier, or other individual or entity so identified solely on the basis of substantive, reasonable objection after due investigation. Contractor shall submit an acceptable replacement for the rejected Subcontractor, Supplier, or other individual or entity.

F. If Owner requires the replacement of any Subcontractor, Supplier, or other individual or entity retained by Contractor to perform any part of the Work, then Contractor shall be entitled to an adjustment in Contract Price or Contract Times, or both, with respect to the replacement; and Contractor shall initiate a Change Proposal for such adjustment within 30 days of Owner's requirement of replacement.

G. No acceptance by Owner of any such Subcontractor, Supplier, or other individual or entity, whether initially or as a replacement, shall constitute a waiver of the right of Owner to the completion of the Work in accordance with the Contract Documents.

H. On a monthly basis Contractor shall submit to Engineer a complete list of all Subcontractors and Suppliers having a direct contract with Contractor, and of all other Subcontractors and Suppliers known to Contractor at the time of submittal.

I. Contractor shall be fully responsible to Owner and Engineer for all acts and omissions of the Subcontractors, Suppliers, and other individuals or entities performing or furnishing any of the Work just as Contractor is responsible for Contractor's own acts and omissions.

J. Contractor shall be solely responsible for scheduling and coordinating the work of Subcontractors, Suppliers, and all other individuals or entities performing or furnishing any of the Work.

K. Contractor shall restrict all Subcontractors, Suppliers, and such other individuals or entities performing or furnishing any of the Work from communicating with Engineer or Owner, except through Contractor or in case of an emergency, or as otherwise expressly allowed herein.

L. The divisions and sections of the Specifications and the identifications of any Drawings shall not control Contractor in dividing the Work among Subcontractors or Suppliers or delineating the Work to be performed by any specific trade.

M. All Work performed for Contractor by a Subcontractor or Supplier shall be pursuant to an appropriate contractual agreement that specifically binds the Subcontractor or Supplier to the applicable terms and conditions of the Contract Documents for the benefit of Owner and Engineer.

N. Owner may furnish to any Subcontractor or Supplier, to the extent practicable, information about amounts paid to Contractor on account of Work performed for Contractor by the particular Subcontractor or Supplier.

2) available engineering, sales, maintenance, repair, and replacement services.

d. shall contain an itemized estimate of all costs or credits that will result directly or indirectly from use of such substitute item, including but not limited to changes in Contract Price, shared savings, costs of redesign, and claims of other contractors affected by any resulting change.

B. *Engineer's Evaluation and Determination*: Engineer will be allowed a reasonable time to evaluate each substitute request, and to obtain comments and direction from Owner. Engineer may require Contractor to furnish additional data about the proposed substitute item. Engineer will be the sole judge of acceptability. No substitute will be ordered, furnished, installed, or utilized until Engineer's review is complete and Engineer determines that the proposed item is an acceptable substitute. Engineer's determination will be evidenced by a Field Order or a proposed Change Order accounting for the substitution itself and all related impacts, including changes in Contract Price or Contract Times. Engineer will advise Contractor in writing of any negative determination.

C. *Special Guarantee*: Owner may require Contractor to furnish at Contractor's expense a special performance guarantee or other surety with respect to any substitute.

D. *Reimbursement of Engineer's Cost*: Engineer will record Engineer's costs in evaluating a substitute proposed or submitted by Contractor. Whether or not Engineer approves a substitute so proposed or submitted by Contractor, Contractor shall reimburse Owner for the reasonable charges of Engineer for evaluating each such proposed substitute. Contractor shall also reimburse Owner for the reasonable charges of Engineer for making changes in the Contract Documents (or in the provisions of any other direct contract with Owner) resulting from the acceptance of each proposed substitute.

E. *Contractor's Expense*: Contractor shall provide all data in support of any proposed substitute at Contractor's expense.

F. *Effect of Engineer's Determination*: If Engineer approves the substitution request, Contractor shall execute the proposed Change Order and proceed with the substitution. The Engineer's denial of a substitution request shall be final and binding, and may not be reversed through an appeal under any provision of the Contract Documents. Contractor may challenge the scope of reimbursement costs imposed under Paragraph 7.05.D, by timely submittal of a Change Proposal.

7.06 *Concerning Subcontractors, Suppliers, and Others*

A. Contractor may retain Subcontractors and Suppliers for the performance of parts of the Work. Such Subcontractors and Suppliers must be acceptable to Owner.

B. Contractor shall retain specific Subcontractors, Suppliers, or other individuals or entities for the performance of designated parts of the Work if required by the Contract to do so.

C. Subsequent to the submittal of Contractor's Bid or final negotiation of the terms of the Contract, Owner may not require Contractor to retain any Subcontractor, Supplier, or other individual or entity to furnish or perform any of the Work against which Contractor has reasonable objection.

D. Prior to entry into any binding subcontract or purchase order, Contractor shall submit to Owner the identity of the proposed Subcontractor or Supplier (unless Owner has already deemed such proposed Subcontractor or Supplier acceptable, during the bidding process or otherwise). Such proposed Subcontractor or Supplier shall be deemed acceptable to Owner unless Owner raises a substantive, reasonable objection within five days.

D. *Effect of Engineer's Determination*: Neither approval nor denial of an "or-equal" request shall result in any change in Contract Price. The Engineer's denial of an "or-equal" request shall be final and binding, and may not be reversed through an appeal under any provision of the Contract Documents.

E. *Treatment as a Substitution Request*: If Engineer determines that an item of material or equipment proposed by Contractor does not qualify as an "or-equal" item, Contractor may request that Engineer considered the proposed item as a substitute pursuant to Paragraph 7.05.

7.05 *Substitutes*

A. Unless the specification or description of an item of material or equipment required to be furnished under the Contract Documents contains or is followed by words reading that no substitution is permitted, Contractor may request that Engineer authorize the use of other items of material or equipment under the circumstances described below. To the extent possible such requests shall be made before commencement of related construction at the Site.

1. Contractor shall submit sufficient information as provided below to allow Engineer to determine if the item of material or equipment proposed is functionally equivalent to that named and an acceptable substitute therefor. Engineer will not accept requests for review of proposed substitute items of material or equipment from anyone other than Contractor.

2. The requirements for review by Engineer will be as set forth in Paragraph 7.05.B, as supplemented by the Specifications, and as Engineer may decide is appropriate under the circumstances.

3. Contractor shall make written application to Engineer for review of a proposed substitute item of material or equipment that Contractor seeks to furnish or use. The application:

a. shall certify that the proposed substitute item will:

1) perform adequately the functions and achieve the results called for by the general design,

2) be similar in substance to that specified, and

3) be suited to the same use as that specified.

b. will state:

1) the extent, if any, to which the use of the proposed substitute item will necessitate a change in Contract Times,

2) whether use of the proposed substitute item in the Work will require a change in any of the Contract Documents (or in the provisions of any other direct contract with Owner for other work on the Project) to adapt the design to the proposed substitute item, and

3) whether incorporation or use of the proposed substitute item in connection with the Work is subject to payment of any license fee or royalty.

c. will identify:

1) all variations of the proposed substitute item from that specified, and

guarantees required by the Specifications shall expressly run to the benefit of Owner. If required by Engineer, Contractor shall furnish satisfactory evidence (including reports of required tests) as to the source, kind, and quality of materials and equipment.

C. All materials and equipment shall be stored, applied, installed, connected, erected, protected, used, cleaned, and conditioned in accordance with instructions of the applicable Supplier, except as otherwise may be provided in the Contract Documents.

7.04 *"Or Equals"*

A. Whenever an item of material or equipment is specified or described in the Contract Documents by using the name of a proprietary item or the name of a particular Supplier, the Contract Price has been based upon Contractor furnishing such item as specified. The specification or description of such an item is intended to establish the type, function, appearance, and quality required. Unless the specification or description contains or is followed by words reading that no like, equivalent, or "or equal" item is permitted, Contractor may request that Engineer authorize the use of other items of material or equipment, or items from other proposed suppliers under the circumstances described below.

1. If Engineer in its sole discretion determines that an item of material or equipment proposed by Contractor is functionally equal to that named and sufficiently similar so that no change in related Work will be required, Engineer shall deem it an "or equal" item. For the purposes of this paragraph, a proposed item of material or equipment will be considered functionally equal to an item so named if:

a. in the exercise of reasonable judgment Engineer determines that:

1) it is at least equal in materials of construction, quality, durability, appearance, strength, and design characteristics;

2) it will reliably perform at least equally well the function and achieve the results imposed by the design concept of the completed Project as a functioning whole;

3) it has a proven record of performance and availability of responsive service; and

4) it is not objectionable to Owner.

b. Contractor certifies that, if approved and incorporated into the Work:

1) there will be no increase in cost to the Owner or increase in Contract Times; and

2) it will conform substantially to the detailed requirements of the item named in the Contract Documents.

B. *Contractor's Expense*: Contractor shall provide all data in support of any proposed "or equal" item at Contractor's expense.

C. *Engineer's Evaluation and Determination*: Engineer will be allowed a reasonable time to evaluate each "or-equal" request. Engineer may require Contractor to furnish additional data about the proposed "or-equal" item. Engineer will be the sole judge of acceptability. No "or-equal" item will be ordered, furnished, installed, or utilized until Engineer's review is complete and Engineer determines that the proposed item is an "or-equal", which will be evidenced by an approved Shop Drawing or other written communication. Engineer will advise Contractor in writing of any negative determination.

policy. Such named insured shall act as fiduciary for the other insureds, and give notice to such other insureds that adjustment and settlement of a claim is in progress. Any other insured may state its position regarding a claim for insured loss in writing within 15 days after notice of such claim.

B. Proceeds for such insured losses may be made payable by the insurer either jointly to multiple insureds, or to the named insured that purchased the policy in its own right and as fiduciary for other insureds, subject to the requirements of any applicable mortgage clause. A named insured receiving insurance proceeds under the builder's risk and other policies of insurance required by Paragraph 6.05 shall distribute such proceeds in accordance with such agreement as the parties in interest may reach, or as otherwise required under the dispute resolution provisions of this Contract or applicable Laws and Regulations.

C. If no other special agreement is reached, the damaged Work shall be repaired or replaced, the money so received applied on account thereof, and the Work and the cost thereof covered by Change Order, if needed.

ARTICLE 7 – CONTRACTOR'S RESPONSIBILITIES

7.01 *Supervision and Superintendence*

A. Contractor shall supervise, inspect, and direct the Work competently and efficiently, devoting such attention thereto and applying such skills and expertise as may be necessary to perform the Work in accordance with the Contract Documents. Contractor shall be solely responsible for the means, methods, techniques, sequences, and procedures of construction.

B. At all times during the progress of the Work, Contractor shall assign a competent resident superintendent who shall not be replaced without written notice to Owner and Engineer except under extraordinary circumstances.

7.02 *Labor; Working Hours*

A. Contractor shall provide competent, suitably qualified personnel to survey and lay out the Work and perform construction as required by the Contract Documents. Contractor shall at all times maintain good discipline and order at the Site.

B. Except as otherwise required for the safety or protection of persons or the Work or property at the Site or adjacent thereto, and except as otherwise stated in the Contract Documents, all Work at the Site shall be performed during regular working hours, Monday through Friday. Contractor will not perform Work on a Saturday, Sunday, or any legal holiday. Contractor may perform Work outside regular working hours or on Saturdays, Sundays, or legal holidays only with Owner's written consent, which will not be unreasonably withheld.

7.03 *Services, Materials, and Equipment*

A. Unless otherwise specified in the Contract Documents, Contractor shall provide and assume full responsibility for all services, materials, equipment, labor, transportation, construction equipment and machinery, tools, appliances, fuel, power, light, heat, telephone, water, sanitary facilities, temporary facilities, and all other facilities and incidentals necessary for the performance, testing, start up, and completion of the Work, whether or not such items are specifically called for in the Contract Documents.

B. All materials and equipment incorporated into the Work shall be of good quality and new, except as otherwise provided in the Contract Documents. All special warranties and

6.06 *Waiver of Rights*

A. All policies purchased in accordance with Paragraph 6.05, expressly including the builder's risk policy, shall contain provisions to the effect that in the event of payment of any loss or damage the insurers will have no rights of recovery against any insureds thereunder, or against Engineer or its consultants, or their officers, directors, members, partners, employees, agents, consultants, or subcontractors. Owner and Contractor waive all rights against each other and the respective officers, directors, members, partners, employees, agents, consultants, and subcontractors of each and any of them, for all losses and damages caused by, arising out of, or resulting from any of the perils or causes of loss covered by such policies and any other property insurance applicable to the Work; and, in addition, waive all such rights against Engineer, its consultants, all Subcontractors, all individuals or entities identified in the Supplementary Conditions as insureds, and the officers, directors, members, partners, employees, agents, consultants, and subcontractors of each and any of them, under such policies for losses and damages so caused. None of the above waivers shall extend to the rights that any party making such waiver may have to the proceeds of insurance held by Owner or Contractor as trustee or fiduciary, or otherwise payable under any policy so issued.

B. Owner waives all rights against Contractor, Subcontractors, and Engineer, and the officers, directors, members, partners, employees, agents, consultants and subcontractors of each and any of them, for:

1. loss due to business interruption, loss of use, or other consequential loss extending beyond direct physical loss or damage to Owner's property or the Work caused by, arising out of, or resulting from fire or other perils whether or not insured by Owner; and

2. loss or damage to the completed Project or part thereof caused by, arising out of, or resulting from fire or other insured peril or cause of loss covered by any property insurance maintained on the completed Project or part thereof by Owner during partial occupancy or use pursuant to Paragraph 15.04, after Substantial Completion pursuant to Paragraph 15.03, or after final payment pursuant to Paragraph 15.06.

C. Any insurance policy maintained by Owner covering any loss, damage or consequential loss referred to in Paragraph 6.06.B shall contain provisions to the effect that in the event of payment of any such loss, damage, or consequential loss, the insurers will have no rights of recovery against Contractor, Subcontractors, or Engineer, or the officers, directors, members, partners, employees, agents, consultants, or subcontractors of each and any of them.

D. Contractor shall be responsible for assuring that the agreement under which a Subcontractor performs a portion of the Work contains provisions whereby the Subcontractor waives all rights against Owner, Contractor, all individuals or entities identified in the Supplementary Conditions as insureds, the Engineer and its consultants, and the officers, directors, members, partners, employees, agents, consultants, and subcontractors of each and any of them, for all losses and damages caused by, arising out of, relating to, or resulting from any of the perils or causes of loss covered by builder's risk insurance and any other property insurance applicable to the Work.

6.07 *Receipt and Application of Property Insurance Proceeds*

A. Any insured loss under the builder's risk and other policies of insurance required by Paragraph 6.05 will be adjusted and settled with the named insured that purchased the

5. extend to cover damage or loss to insured property while in temporary storage at the Site or in a storage location outside the Site (but not including property stored at the premises of a manufacturer or Supplier).
6. extend to cover damage or loss to insured property while in transit.
7. allow for partial occupation or use of the Work by Owner, such that those portions of the Work that are not yet occupied or used by Owner shall remain covered by the builder's risk insurance.
8. allow for the waiver of the insurer's subrogation rights, as set forth below.
9. provide primary coverage for all losses and damages caused by the perils or causes of loss covered.
10. not include a co-insurance clause.
11. include an exception for ensuing losses from physical damage or loss with respect to any defective workmanship, design, or materials exclusions.
12. include performance/hot testing and start-up.
13. be maintained in effect, subject to the provisions herein regarding Substantial Completion and partial occupancy or use of the Work by Owner, until the Work is complete.

B. *Notice of Cancellation or Change*: All the policies of insurance (and the certificates or other evidence thereof) required to be purchased and maintained in accordance with this Paragraph 6.05 will contain a provision or endorsement that the coverage afforded will not be canceled or materially changed or renewal refused until at least 10 days prior written notice has been given to the purchasing policyholder. Within three days of receipt of any such written notice, the purchasing policyholder shall provide a copy of the notice to each other insured.

C. *Deductibles*: The purchaser of any required builder's risk or property insurance shall pay for costs not covered because of the application of a policy deductible.

D. *Partial Occupancy or Use by Owner*: If Owner will occupy or use a portion or portions of the Work prior to Substantial Completion of all the Work as provided in Paragraph 15.04, then Owner (directly, if it is the purchaser of the builder's risk policy, or through Contractor) will provide notice of such occupancy or use to the builder's risk insurer. The builder's risk insurance shall not be canceled or permitted to lapse on account of any such partial use or occupancy; rather, those portions of the Work that are occupied or used by Owner may come off the builder's risk policy, while those portions of the Work not yet occupied or used by Owner shall remain covered by the builder's risk insurance.

E. *Additional Insurance*: If Contractor elects to obtain other special insurance to be included in or supplement the builder's risk or property insurance policies provided under this Paragraph 6.05, it may do so at Contractor's expense.

F. *Insurance of Other Property*: If the express insurance provisions of the Contract do not require or address the insurance of a property item or interest, such as tools, construction equipment, or other personal property owned by Contractor, a Subcontractor, or an employee of Contractor or a Subcontractor, then the entity or individual owning such property item will be responsible for deciding whether to insure it, and if so in what amount.

6.04 *Owner's Liability Insurance*

A. In addition to the insurance required to be provided by Contractor under Paragraph 6.03, Owner, at Owner's option, may purchase and maintain at Owner's expense Owner's own liability insurance as will protect Owner against claims which may arise from operations under the Contract Documents.

B. Owner's liability policies, if any, operate separately and independently from policies required to be provided by Contractor, and Contractor cannot rely upon Owner's liability policies for any of Contractor's obligations to the Owner, Engineer, or third parties.

6.05 *Property Insurance*

A. *Builder's Risk*: Unless otherwise provided in the Supplementary Conditions, Contractor shall purchase and maintain builder's risk insurance upon the Work on a completed value basis, in the amount of the full insurable replacement cost thereof (subject to such deductible amounts as may be provided in the Supplementary Conditions or required by Laws and Regulations). This insurance shall:

1. include the Owner and Contractor as named insureds, and all Subcontractors, and any individuals or entities required by the Supplementary Conditions to be insured under such builder's risk policy, as insureds or named insureds. For purposes of the remainder of this Paragraph 6.05, Paragraphs 6.06 and 6.07, and any corresponding Supplementary Conditions, the parties required to be insured shall collectively be referred to as "insureds."

2. be written on a builder's risk "all risk" policy form that shall at least include insurance for physical loss or damage to the Work, temporary buildings, falsework, and materials and equipment in transit, and shall insure against at least the following perils or causes of loss: fire; lightning; windstorm; riot; civil commotion; terrorism; vehicle impact; aircraft; smoke; theft; vandalism and malicious mischief; mechanical breakdown, boiler explosion, and artificially generated electric current; earthquake; volcanic activity, and other earth movement; flood; collapse; explosion; debris removal; demolition occasioned by enforcement of Laws and Regulations; water damage (other than that caused by flood); and such other perils or causes of loss as may be specifically required by the Supplementary Conditions. If insurance against mechanical breakdown, boiler explosion, and artificially generated electric current; earthquake; volcanic activity, and other earth movement; or flood, are not commercially available under builder's risk policies, by endorsement or otherwise, such insurance may be provided through other insurance policies acceptable to Owner and Contractor.

3. cover, as insured property, at least the following: (a) the Work and all materials, supplies, machinery, apparatus, equipment, fixtures, and other property of a similar nature that are to be incorporated into or used in the preparation, fabrication, construction, erection, or completion of the Work, including Owner-furnished or assigned property; (b) spare parts inventory required within the scope of the Contract; and (c) temporary works which are not intended to form part of the permanent constructed Work but which are intended to provide working access to the Site, or to the Work under construction, or which are intended to provide temporary support for the Work under construction, including scaffolding, form work, fences, shoring, falsework, and temporary structures.

4. cover expenses incurred in the repair or replacement of any insured property (including but not limited to fees and charges of engineers and architects).

of pollution conditions arising from Contractor's operations and completed operations. This insurance shall be maintained for no less than three years after final completion.

G. *Additional insureds*: The Contractor's commercial general liability, automobile liability, umbrella or excess, and pollution liability policies shall include and list as additional insureds Owner and Engineer, and any individuals or entities identified in the Supplementary Conditions; include coverage for the respective officers, directors, members, partners, employees, agents, consultants, and subcontractors of each and any of all such additional insureds; and the insurance afforded to these additional insureds shall provide primary coverage for all claims covered thereby (including as applicable those arising from both ongoing and completed operations) on a non-contributory basis. Contractor shall obtain all necessary endorsements to support these requirements.

H. *Contractor's professional liability insurance*: If Contractor will provide or furnish professional services under this Contract, through a delegation of professional design services or otherwise, then Contractor shall be responsible for purchasing and maintaining applicable professional liability insurance. This insurance shall provide protection against claims arising out of performance of professional design or related services, and caused by a negligent error, omission, or act for which the insured party is legally liable. It shall be maintained throughout the duration of the Contract and for a minimum of two years after Substantial Completion. If such professional design services are performed by a Subcontractor, and not by Contractor itself, then the requirements of this paragraph may be satisfied through the purchasing and maintenance of such insurance by such Subcontractor.

I. *General provisions*: The policies of insurance required by this Paragraph 6.03 shall:

1. include at least the specific coverages provided in this Article.
2. be written for not less than the limits of liability provided in this Article and in the Supplementary Conditions, or required by Laws or Regulations, whichever is greater.
3. contain a provision or endorsement that the coverage afforded will not be canceled, materially changed, or renewal refused until at least 10 days prior written notice has been given to Contractor. Within three days of receipt of any such written notice, Contractor shall provide a copy of the notice to Owner, Engineer, and each other insured under the policy.
4. remain in effect at least until final payment (and longer if expressly required in this Article) and at all times thereafter when Contractor may be correcting, removing, or replacing defective Work as a warranty or correction obligation, or otherwise, or returning to the Site to conduct other tasks arising from the Contract Documents.
5. be appropriate for the Work being performed and provide protection from claims that may arise out of or result from Contractor's performance of the Work and Contractor's other obligations under the Contract Documents, whether it is to be performed by Contractor, any Subcontractor or Supplier, or by anyone directly or indirectly employed by any of them to perform any of the Work, or by anyone for whose acts any of them may be liable.

J. The coverage requirements for specific policies of insurance must be met by such policies, and not by reference to excess or umbrella insurance provided in other policies.

4. Foreign voluntary worker compensation (if applicable).

B. *Commercial General Liability—Claims Covered*: Contractor shall purchase and maintain commercial general liability insurance, covering all operations by or on behalf of Contractor, on an occurrence basis, against:

1. claims for damages because of bodily injury, sickness or disease, or death of any person other than Contractor's employees.
2. claims for damages insured by reasonably available personal injury liability coverage.
3. claims for damages, other than to the Work itself, because of injury to or destruction of tangible property wherever located, including loss of use resulting therefrom.

C. *Commercial General Liability—Form and Content*: Contractor's commercial liability policy shall be written on a 1996 (or later) ISO commercial general liability form (occurrence form) and include the following coverages and endorsements:

1. Products and completed operations coverage:
   a. Such insurance shall be maintained for three years after final payment.
   b. Contractor shall furnish Owner and each other additional insured (as identified in the Supplementary Conditions or elsewhere in the Contract) evidence of continuation of such insurance at final payment and three years thereafter.
2. Blanket contractual liability coverage, to the extent permitted by law, including but not limited to coverage of Contractor's contractual indemnity obligations in Paragraph 7.18.
3. Broad form property damage coverage.
4. Severability of interest.
5. Underground, explosion, and collapse coverage.
6. Personal injury coverage.
7. Additional insured endorsements that include both ongoing operations and products and completed operations coverage through ISO Endorsements CG 20 10 10 01 and CG 20 37 10 01 (together); or CG 20 10 07 04 and CG 20 37 07 04 (together); or their equivalent.
8. For design professional additional insureds, ISO Endorsement CG 20 32 07 04, "Additional Insured—Engineers, Architects or Surveyors Not Engaged by the Named Insured" or its equivalent.

D. *Automobile liability*: Contractor shall purchase and maintain automobile liability insurance against claims for damages because of bodily injury or death of any person or property damage arising out of the ownership, maintenance, or use of any motor vehicle. The automobile liability policy shall be written on an occurrence basis.

E. *Umbrella or excess liability*: Contractor shall purchase and maintain umbrella or excess liability insurance written over the underlying employer's liability, commercial general liability, and automobile liability insurance described in the paragraphs above. Subject to industry-standard exclusions, the coverage afforded shall follow form as to each and every one of the underlying policies.

F. *Contractor's pollution liability insurance*: Contractor shall purchase and maintain a policy covering third-party injury and property damage claims, including clean-up costs, as a result

maintaining the policies, coverages, and endorsements required by the Contract. Upon request by Owner or any other insured, Contractor shall also furnish other evidence of such required insurance, including but not limited to copies of policies and endorsements, and documentation of applicable self-insured retentions and deductibles. Contractor may block out (redact) any confidential premium or pricing information contained in any policy or endorsement furnished under this provision.

D. Owner shall deliver to Contractor, with copies to each named insured and additional insured (as identified in this Article, the Supplementary Conditions, or elsewhere in the Contract), certificates of insurance establishing that Owner has obtained and is maintaining the policies, coverages, and endorsements required of Owner by the Contract (if any). Upon request by Contractor or any other insured, Owner shall also provide other evidence of such required insurance (if any), including but not limited to copies of policies and endorsements, and documentation of applicable self-insured retentions and deductibles. Owner may block out (redact) any confidential premium or pricing information contained in any policy or endorsement furnished under this provision.

E. Failure of Owner or Contractor to demand such certificates or other evidence of the other party's full compliance with these insurance requirements, or failure of Owner or Contractor to identify a deficiency in compliance from the evidence provided, shall not be construed as a waiver of the other party's obligation to obtain and maintain such insurance.

F. If either party does not purchase or maintain all of the insurance required of such party by the Contract, such party shall notify the other party in writing of such failure to purchase prior to the start of the Work, or of such failure to maintain prior to any change in the required coverage.

G. If Contractor has failed to obtain and maintain required insurance, Owner may exclude the Contractor from the Site, impose an appropriate set-off against payment, and exercise Owner's termination rights under Article 16.

H. Without prejudice to any other right or remedy, if a party has failed to obtain required insurance, the other party may elect to obtain equivalent insurance to protect such other party's interests at the expense of the party who was required to provide such coverage, and the Contract Price shall be adjusted accordingly.

I. Owner does not represent that insurance coverage and limits established in this Contract necessarily will be adequate to protect Contractor or Contractor's interests.

J. The insurance and insurance limits required herein shall not be deemed as a limitation on Contractor's liability under the indemnities granted to Owner and other individuals and entities in the Contract.

6.03 *Contractor's Insurance*

A. *Workers' Compensation*: Contractor shall purchase and maintain workers' compensation and employer's liability insurance for:

1. claims under workers' compensation, disability benefits, and other similar employee benefit acts.

2. United States Longshoreman and Harbor Workers' Compensation Act and Jones Act coverage (if applicable).

3. claims for damages because of bodily injury, occupational sickness or disease, or death of Contractor's employees (by stop-gap endorsement in monopolist worker's compensation states).

ARTICLE 6 – BONDS AND INSURANCE

6.01 *Performance, Payment, and Other Bonds*

A. Contractor shall furnish a performance bond and a payment bond, each in an amount at least equal to the Contract Price, as security for the faithful performance and payment of all of Contractor's obligations under the Contract. These bonds shall remain in effect until one year after the date when final payment becomes due or until completion of the correction period specified in Paragraph 15.08, whichever is later, except as provided otherwise by Laws or Regulations, the Supplementary Conditions, or other specific provisions of the Contract. Contractor shall also furnish such other bonds as are required by the Supplementary Conditions or other specific provisions of the Contract.

B. All bonds shall be in the form prescribed by the Contract except as provided otherwise by Laws or Regulations, and shall be executed by such sureties as are named in "Companies Holding Certificates of Authority as Acceptable Sureties on Federal Bonds and as Acceptable Reinsuring Companies" as published in Circular 570 (as amended and supplemented) by the Financial Management Service, Surety Bond Branch, U.S. Department of the Treasury. A bond signed by an agent or attorney-in-fact must be accompanied by a certified copy of that individual's authority to bind the surety. The evidence of authority shall show that it is effective on the date the agent or attorney-in-fact signed the accompanying bond.

C. Contractor shall obtain the required bonds from surety companies that are duly licensed or authorized in the jurisdiction in which the Project is located to issue bonds in the required amounts.

D. If the surety on a bond furnished by Contractor is declared bankrupt or becomes insolvent, or its right to do business is terminated in any state or jurisdiction where any part of the Project is located, or the surety ceases to meet the requirements above, then Contractor shall promptly notify Owner and Engineer and shall, within 20 days after the event giving rise to such notification, provide another bond and surety, both of which shall comply with the bond and surety requirements above.

E. If Contractor has failed to obtain a required bond, Owner may exclude the Contractor from the Site and exercise Owner's termination rights under Article 16.

F. Upon request, Owner shall provide a copy of the payment bond to any Subcontractor, Supplier, or other person or entity claiming to have furnished labor or materials used in the performance of the Work.

6.02 *Insurance—General Provisions*

A. Owner and Contractor shall obtain and maintain insurance as required in this Article and in the Supplementary Conditions.

B. All insurance required by the Contract to be purchased and maintained by Owner or Contractor shall be obtained from insurance companies that are duly licensed or authorized, in the state or jurisdiction in which the Project is located, to issue insurance policies for the required limits and coverages. Unless a different standard is indicated in the Supplementary Conditions, all companies that provide insurance policies required under this Contract shall have an A.M. Best rating of A-VII or better.

C. Contractor shall deliver to Owner, with copies to each named insured and additional insured (as identified in this Article, in the Supplementary Conditions, or elsewhere in the Contract), certificates of insurance establishing that Contractor has obtained and is

F. Contractor shall not resume Work in connection with such Hazardous Environmental Condition or in any affected area until after Owner has obtained any required permits related thereto, and delivered written notice to Contractor either (1) specifying that such condition and any affected area is or has been rendered safe for the resumption of Work, or (2) specifying any special conditions under which such Work may be resumed safely.

G. If Owner and Contractor cannot agree as to entitlement to or on the amount or extent, if any, of any adjustment in Contract Price or Contract Times, or both, as a result of such Work stoppage or such special conditions under which Work is agreed to be resumed by Contractor, then within 30 days of Owner's written notice regarding the resumption of Work, Contractor may submit a Change Proposal, or Owner may impose a set-off.

H. If after receipt of such written notice Contractor does not agree to resume such Work based on a reasonable belief it is unsafe, or does not agree to resume such Work under such special conditions, then Owner may order the portion of the Work that is in the area affected by such condition to be deleted from the Work, following the contractual change procedures in Article 11. Owner may have such deleted portion of the Work performed by Owner's own forces or others in accordance with Article 8.

I. To the fullest extent permitted by Laws and Regulations, Owner shall indemnify and hold harmless Contractor, Subcontractors, and Engineer, and the officers, directors, members, partners, employees, agents, consultants, and subcontractors of each and any of them from and against all claims, costs, losses, and damages (including but not limited to all fees and charges of engineers, architects, attorneys, and other professionals and all court or arbitration or other dispute resolution costs) arising out of or relating to a Hazardous Environmental Condition, provided that such Hazardous Environmental Condition (1) was not shown or indicated in the Drawings, Specifications, or other Contract Documents, identified as Technical Data entitled to limited reliance pursuant to Paragraph 5.06.B, or identified in the Contract Documents to be included within the scope of the Work, and (2) was not created by Contractor or by anyone for whom Contractor is responsible. Nothing in this Paragraph 5.06.I shall obligate Owner to indemnify any individual or entity from and against the consequences of that individual's or entity's own negligence.

J. To the fullest extent permitted by Laws and Regulations, Contractor shall indemnify and hold harmless Owner and Engineer, and the officers, directors, members, partners, employees, agents, consultants, and subcontractors of each and any of them from and against all claims, costs, losses, and damages (including but not limited to all fees and charges of engineers, architects, attorneys, and other professionals and all court or arbitration or other dispute resolution costs) arising out of or relating to the failure to control, contain, or remove a Constituent of Concern brought to the Site by Contractor or by anyone for whom Contractor is responsible, or to a Hazardous Environmental Condition created by Contractor or by anyone for whom Contractor is responsible. Nothing in this Paragraph 5.06.J shall obligate Contractor to indemnify any individual or entity from and against the consequences of that individual's or entity's own negligence.

K. The provisions of Paragraphs 5.03, 5.04, and 5.05 do not apply to the presence of Constituents of Concern or to a Hazardous Environmental Condition uncovered or revealed at the Site.

5.06 *Hazardous Environmental Conditions at Site*

A. *Reports and Drawings*: The Supplementary Conditions identify:

1. those reports and drawings known to Owner relating to Hazardous Environmental Conditions that have been identified at or adjacent to the Site; and

2. Technical Data contained in such reports and drawings.

B. *Reliance by Contractor on Technical Data Authorized*: Contractor may rely upon the accuracy of the Technical Data expressly identified in the Supplementary Conditions with respect to such reports and drawings, but such reports and drawings are not Contract Documents. If no such express identification has been made, then Contractor may rely on the accuracy of the Technical Data (as defined in Article 1) contained in any geotechnical or environmental report prepared for the Project and made available to Contractor. Except for such reliance on Technical Data, Contractor may not rely upon or make any claim against Owner or Engineer, or any of their officers, directors, members, partners, employees, agents, consultants, or subcontractors with respect to:

1. the completeness of such reports and drawings for Contractor's purposes, including, but not limited to, any aspects of the means, methods, techniques, sequences and procedures of construction to be employed by Contractor and safety precautions and programs incident thereto; or

2. other data, interpretations, opinions and information contained in such reports or shown or indicated in such drawings; or

3. any Contractor interpretation of or conclusion drawn from any Technical Data or any such other data, interpretations, opinions or information.

C. Contractor shall not be responsible for removing or remediating any Hazardous Environmental Condition encountered, uncovered, or revealed at the Site unless such removal or remediation is expressly identified in the Contract Documents to be within the scope of the Work.

D. Contractor shall be responsible for controlling, containing, and duly removing all Constituents of Concern brought to the Site by Contractor, Subcontractors, Suppliers, or anyone else for whom Contractor is responsible, and for any associated costs; and for the costs of removing and remediating any Hazardous Environmental Condition created by the presence of any such Constituents of Concern.

E. If Contractor encounters, uncovers, or reveals a Hazardous Environmental Condition whose removal or remediation is not expressly identified in the Contract Documents as being within the scope of the Work, or if Contractor or anyone for whom Contractor is responsible creates a Hazardous Environmental Condition, then Contractor shall immediately: (1) secure or otherwise isolate such condition; (2) stop all Work in connection with such condition and in any area affected thereby (except in an emergency as required by Paragraph 7.15); and (3) notify Owner and Engineer (and promptly thereafter confirm such notice in writing). Owner shall promptly consult with Engineer concerning the necessity for Owner to retain a qualified expert to evaluate such condition or take corrective action, if any. Promptly after consulting with Engineer, Owner shall take such actions as are necessary to permit Owner to timely obtain required permits and provide Contractor the written notice required by Paragraph 5.06.F. If Contractor or anyone for whom Contractor is responsible created the Hazardous Environmental Condition in question, then Owner may remove and remediate the Hazardous Environmental Condition, and impose a set-off against payments to account for the associated costs.

becoming aware thereof and before further disturbing conditions affected thereby or performing any Work in connection therewith (except in an emergency as required by Paragraph 7.15), identify the owner of such Underground Facility and give written notice to that owner and to Owner and Engineer.

C. *Engineer's Review*: Engineer will promptly review the Underground Facility and conclude whether such Underground Facility was not shown or indicated in the Contract Documents, or was not shown or indicated with reasonable accuracy; obtain any pertinent cost or schedule information from Contractor; prepare recommendations to Owner regarding the Contractor's resumption of Work in connection with the Underground Facility in question; determine the extent, if any, to which a change is required in the Drawings or Specifications to reflect and document the consequences of the existence or location of the Underground Facility; and advise Owner in writing of Engineer's findings, conclusions, and recommendations. During such time, Contractor shall be responsible for the safety and protection of such Underground Facility.

D. *Owner's Statement to Contractor Regarding Underground Facility*: After receipt of Engineer's written findings, conclusions, and recommendations, Owner shall issue a written statement to Contractor (with a copy to Engineer) regarding the Underground Facility in question, addressing the resumption of Work in connection with such Underground Facility, indicating whether any change in the Drawings or Specifications will be made, and adopting or rejecting Engineer's written findings, conclusions, and recommendations in whole or in part.

E. *Possible Price and Times Adjustments*:

1. Contractor shall be entitled to an equitable adjustment in the Contract Price or Contract Times, or both, to the extent that any existing Underground Facility at the Site that was not shown or indicated in the Contract Documents, or was not shown or indicated with reasonable accuracy, or any related delay, disruption, or interference, causes an increase or decrease in Contractor's cost of, or time required for, performance of the Work; subject, however, to the following:

   a. Contractor did not know of and could not reasonably have been expected to be aware of or to have anticipated the existence or actual location of the Underground Facility in question;

   b. With respect to Work that is paid for on a unit price basis, any adjustment in Contract Price will be subject to the provisions of Paragraph 13.03;

   c. Contractor's entitlement to an adjustment of the Contract Times is conditioned on such adjustment being essential to Contractor's ability to complete the Work within the Contract Times; and

   d. Contractor gave the notice required in Paragraph 5.05.B.

2. If Owner and Contractor agree regarding Contractor's entitlement to and the amount or extent of any adjustment in the Contract Price or Contract Times, or both, then any such adjustment shall be set forth in a Change Order.

3. Contractor may submit a Change Proposal regarding its entitlement to or the amount or extent of any adjustment in the Contract Price or Contract Times, or both, no later than 30 days after Owner's issuance of the Owner's written statement to Contractor regarding the Underground Facility in question.

c. Contractor's entitlement to an adjustment of the Contract Times is conditioned on such adjustment being essential to Contractor's ability to complete the Work within the Contract Times.

2. Contractor shall not be entitled to any adjustment in the Contract Price or Contract Times with respect to a subsurface or physical condition if:

a. Contractor knew of the existence of such condition at the time Contractor made a commitment to Owner with respect to Contract Price and Contract Times by the submission of a Bid or becoming bound under a negotiated contract, or otherwise; or

b. the existence of such condition reasonably could have been discovered or revealed as a result of any examination, investigation, exploration, test, or study of the Site and contiguous areas expressly required by the Bidding Requirements or Contract Documents to be conducted by or for Contractor prior to Contractor's making such commitment; or

c. Contractor failed to give the written notice as required by Paragraph 5.04.A.

3. If Owner and Contractor agree regarding Contractor's entitlement to and the amount or extent of any adjustment in the Contract Price or Contract Times, or both, then any such adjustment shall be set forth in a Change Order.

4. Contractor may submit a Change Proposal regarding its entitlement to or the amount or extent of any adjustment in the Contract Price or Contract Times, or both, no later than 30 days after Owner's issuance of the Owner's written statement to Contractor regarding the subsurface or physical condition in question.

5.05 *Underground Facilities*

A. *Contractor's Responsibilities*: The information and data shown or indicated in the Contract Documents with respect to existing Underground Facilities at or adjacent to the Site is based on information and data furnished to Owner or Engineer by the owners of such Underground Facilities, including Owner, or by others. Unless it is otherwise expressly provided in the Supplementary Conditions:

1. Owner and Engineer do not warrant or guarantee the accuracy or completeness of any such information or data provided by others; and

2. the cost of all of the following will be included in the Contract Price, and Contractor shall have full responsibility for:

a. reviewing and checking all information and data regarding existing Underground Facilities at the Site;

b. locating all Underground Facilities shown or indicated in the Contract Documents as being at the Site;

c. coordination of the Work with the owners (including Owner) of such Underground Facilities, during construction; and

d. the safety and protection of all existing Underground Facilities at the Site, and repairing any damage thereto resulting from the Work.

B. *Notice by Contractor*: If Contractor believes that an Underground Facility that is uncovered or revealed at the Site was not shown or indicated in the Contract Documents, or was not shown or indicated with reasonable accuracy, then Contractor shall, promptly after

5.04 *Differing Subsurface or Physical Conditions*

A. *Notice by Contractor*: If Contractor believes that any subsurface or physical condition that is uncovered or revealed at the Site either:

1. is of such a nature as to establish that any Technical Data on which Contractor is entitled to rely as provided in Paragraph 5.03 is materially inaccurate; or

2. is of such a nature as to require a change in the Drawings or Specifications; or

3. differs materially from that shown or indicated in the Contract Documents; or

4. is of an unusual nature, and differs materially from conditions ordinarily encountered and generally recognized as inherent in work of the character provided for in the Contract Documents;

then Contractor shall, promptly after becoming aware thereof and before further disturbing the subsurface or physical conditions or performing any Work in connection therewith (except in an emergency as required by Paragraph 7.15), notify Owner and Engineer in writing about such condition. Contractor shall not further disturb such condition or perform any Work in connection therewith (except with respect to an emergency) until receipt of a written statement permitting Contractor to do so.

B. *Engineer's Review*: After receipt of written notice as required by the preceding paragraph, Engineer will promptly review the subsurface or physical condition in question; determine the necessity of Owner's obtaining additional exploration or tests with respect to the condition; conclude whether the condition falls within any one or more of the differing site condition categories in Paragraph 5.04.A above; obtain any pertinent cost or schedule information from Contractor; prepare recommendations to Owner regarding the Contractor's resumption of Work in connection with the subsurface or physical condition in question and the need for any change in the Drawings or Specifications; and advise Owner in writing of Engineer's findings, conclusions, and recommendations.

C. *Owner's Statement to Contractor Regarding Site Condition*: After receipt of Engineer's written findings, conclusions, and recommendations, Owner shall issue a written statement to Contractor (with a copy to Engineer) regarding the subsurface or physical condition in question, addressing the resumption of Work in connection with such condition, indicating whether any change in the Drawings or Specifications will be made, and adopting or rejecting Engineer's written findings, conclusions, and recommendations, in whole or in part.

D. *Possible Price and Times Adjustments*:

1. Contractor shall be entitled to an equitable adjustment in Contract Price or Contract Times, or both, to the extent that the existence of a differing subsurface or physical condition, or any related delay, disruption, or interference, causes an increase or decrease in Contractor's cost of, or time required for, performance of the Work; subject, however, to the following:

a. such condition must fall within any one or more of the categories described in Paragraph 5.04.A;

b. with respect to Work that is paid for on a unit price basis, any adjustment in Contract Price will be subject to the provisions of Paragraph 13.03; and,

by, or based upon, Contractor's performance of the Work, or because of other actions or conduct of the Contractor or those for which Contractor is responsible.

B. *Removal of Debris During Performance of the Work*: During the progress of the Work the Contractor shall keep the Site and other adjacent areas free from accumulations of waste materials, rubbish, and other debris. Removal and disposal of such waste materials, rubbish, and other debris shall conform to applicable Laws and Regulations.

C. *Cleaning*: Prior to Substantial Completion of the Work Contractor shall clean the Site and the Work and make it ready for utilization by Owner. At the completion of the Work Contractor shall remove from the Site and adjacent areas all tools, appliances, construction equipment and machinery, and surplus materials and shall restore to original condition all property not designated for alteration by the Contract Documents.

D. *Loading of Structures*: Contractor shall not load nor permit any part of any structure to be loaded in any manner that will endanger the structure, nor shall Contractor subject any part of the Work or adjacent structures or land to stresses or pressures that will endanger them.

5.03 *Subsurface and Physical Conditions*

A. *Reports and Drawings*: The Supplementary Conditions identify:

1. those reports known to Owner of explorations and tests of subsurface conditions at or adjacent to the Site;

2. those drawings known to Owner of physical conditions relating to existing surface or subsurface structures at the Site (except Underground Facilities); and

3. Technical Data contained in such reports and drawings.

B. *Reliance by Contractor on Technical Data Authorized*: Contractor may rely upon the accuracy of the Technical Data expressly identified in the Supplementary Conditions with respect to such reports and drawings, but such reports and drawings are not Contract Documents. If no such express identification has been made, then Contractor may rely upon the accuracy of the Technical Data (as defined in Article 1) contained in any geotechnical or environmental report prepared for the Project and made available to Contractor. Except for such reliance on Technical Data, Contractor may not rely upon or make any claim against Owner or Engineer, or any of their officers, directors, members, partners, employees, agents, consultants, or subcontractors, with respect to:

1. the completeness of such reports and drawings for Contractor's purposes, including, but not limited to, any aspects of the means, methods, techniques, sequences, and procedures of construction to be employed by Contractor, and safety precautions and programs incident thereto; or

2. other data, interpretations, opinions, and information contained in such reports or shown or indicated in such drawings; or

3. any Contractor interpretation of or conclusion drawn from any Technical Data or any such other data, interpretations, opinions, or information.

G. Contractor must submit any Change Proposal seeking an adjustment in Contract Price or Contract Times under this paragraph within 30 days of the commencement of the delaying, disrupting, or interfering event.

ARTICLE 5 – AVAILABILITY OF LANDS; SUBSURFACE AND PHYSICAL CONDITIONS; HAZARDOUS ENVIRONMENTAL CONDITIONS

5.01 *Availability of Lands*

A. Owner shall furnish the Site. Owner shall notify Contractor of any encumbrances or restrictions not of general application but specifically related to use of the Site with which Contractor must comply in performing the Work.

B. Upon reasonable written request, Owner shall furnish Contractor with a current statement of record legal title and legal description of the lands upon which permanent improvements are to be made and Owner's interest therein as necessary for giving notice of or filing a mechanic's or construction lien against such lands in accordance with applicable Laws and Regulations.

C. Contractor shall provide for all additional lands and access thereto that may be required for temporary construction facilities or storage of materials and equipment.

5.02 *Use of Site and Other Areas*

A. *Limitation on Use of Site and Other Areas*:

1. Contractor shall confine construction equipment, temporary construction facilities, the storage of materials and equipment, and the operations of workers to the Site, adjacent areas that Contractor has arranged to use through construction easements or otherwise, and other adjacent areas permitted by Laws and Regulations, and shall not unreasonably encumber the Site and such other adjacent areas with construction equipment or other materials or equipment. Contractor shall assume full responsibility for (a) damage to the Site; (b) damage to any such other adjacent areas used for Contractor's operations; (c) damage to any other adjacent land or areas; and (d) for injuries and losses sustained by the owners or occupants of any such land or areas; provided that such damage or injuries result from the performance of the Work or from other actions or conduct of the Contractor or those for which Contractor is responsible.

2. If a damage or injury claim is made by the owner or occupant of any such land or area because of the performance of the Work, or because of other actions or conduct of the Contractor or those for which Contractor is responsible, Contractor shall (a) take immediate corrective or remedial action as required by Paragraph 7.12, or otherwise; (b) promptly attempt to settle the claim as to all parties through negotiations with such owner or occupant, or otherwise resolve the claim by arbitration or other dispute resolution proceeding, or at law; and (c) to the fullest extent permitted by Laws and Regulations, indemnify and hold harmless Owner and Engineer, and the officers, directors, members, partners, employees, agents, consultants and subcontractors of each and any of them from and against any such claim, and against all costs, losses, and damages (including but not limited to all fees and charges of engineers, architects, attorneys, and other professionals and all court or arbitration or other dispute resolution costs) arising out of or relating to any claim or action, legal or equitable, brought by any such owner or occupant against Owner, Engineer, or any other party indemnified hereunder to the extent caused directly or indirectly, in whole or in part

2. Proposed adjustments in the Progress Schedule that will change the Contract Times shall be submitted in accordance with the requirements of Article 11.

B. Contractor shall carry on the Work and adhere to the Progress Schedule during all disputes or disagreements with Owner. No Work shall be delayed or postponed pending resolution of any disputes or disagreements, or during any appeal process, except as permitted by Paragraph 16.04, or as Owner and Contractor may otherwise agree in writing.

4.05 *Delays in Contractor's Progress*

A. If Owner, Engineer, or anyone for whom Owner is responsible, delays, disrupts, or interferes with the performance or progress of the Work, then Contractor shall be entitled to an equitable adjustment in the Contract Times and Contract Price. Contractor's entitlement to an adjustment of the Contract Times is conditioned on such adjustment being essential to Contractor's ability to complete the Work within the Contract Times.

B. Contractor shall not be entitled to an adjustment in Contract Price or Contract Times for delay, disruption, or interference caused by or within the control of Contractor. Delay, disruption, and interference attributable to and within the control of a Subcontractor or Supplier shall be deemed to be within the control of Contractor.

C. If Contractor's performance or progress is delayed, disrupted, or interfered with by unanticipated causes not the fault of and beyond the control of Owner, Contractor, and those for which they are responsible, then Contractor shall be entitled to an equitable adjustment in Contract Times. Contractor's entitlement to an adjustment of the Contract Times is conditioned on such adjustment being essential to Contractor's ability to complete the Work within the Contract Times. Such an adjustment shall be Contractor's sole and exclusive remedy for the delays, disruption, and interference described in this paragraph. Causes of delay, disruption, or interference that may give rise to an adjustment in Contract Times under this paragraph include but are not limited to the following:

1. severe and unavoidable natural catastrophes such as fires, floods, epidemics, and earthquakes;

2. abnormal weather conditions;

3. acts or failures to act of utility owners (other than those performing other work at or adjacent to the Site by arrangement with the Owner, as contemplated in Article 8); and

4. acts of war or terrorism.

D. Delays, disruption, and interference to the performance or progress of the Work resulting from the existence of a differing subsurface or physical condition, an Underground Facility that was not shown or indicated by the Contract Documents, or not shown or indicated with reasonable accuracy, and those resulting from Hazardous Environmental Conditions, are governed by Article 5.

E. Paragraph 8.03 governs delays, disruption, and interference to the performance or progress of the Work resulting from the performance of certain other work at or adjacent to the Site.

F. Contractor shall not be entitled to an adjustment in Contract Price or Contract Times for any delay, disruption, or interference if such delay is concurrent with a delay, disruption, or interference caused by or within the control of Contractor.

3.05 *Reuse of Documents*

A. Contractor and its Subcontractors and Suppliers shall not:

1. have or acquire any title to or ownership rights in any of the Drawings, Specifications, or other documents (or copies of any thereof) prepared by or bearing the seal of Engineer or its consultants, including electronic media editions, or reuse any such Drawings, Specifications, other documents, or copies thereof on extensions of the Project or any other project without written consent of Owner and Engineer and specific written verification or adaptation by Engineer; or

2. have or acquire any title or ownership rights in any other Contract Documents, reuse any such Contract Documents for any purpose without Owner's express written consent, or violate any copyrights pertaining to such Contract Documents.

B. The prohibitions of this Paragraph 3.05 will survive final payment, or termination of the Contract. Nothing herein shall preclude Contractor from retaining copies of the Contract Documents for record purposes.

ARTICLE 4 – COMMENCEMENT AND PROGRESS OF THE WORK

4.01 *Commencement of Contract Times; Notice to Proceed*

A. The Contract Times will commence to run on the thirtieth day after the Effective Date of the Contract or, if a Notice to Proceed is given, on the day indicated in the Notice to Proceed. A Notice to Proceed may be given at any time within 30 days after the Effective Date of the Contract. In no event will the Contract Times commence to run later than the sixtieth day after the day of Bid opening or the thirtieth day after the Effective Date of the Contract, whichever date is earlier.

4.02 *Starting the Work*

A. Contractor shall start to perform the Work on the date when the Contract Times commence to run. No Work shall be done at the Site prior to such date.

4.03 *Reference Points*

A. Owner shall provide engineering surveys to establish reference points for construction which in Engineer's judgment are necessary to enable Contractor to proceed with the Work. Contractor shall be responsible for laying out the Work, shall protect and preserve the established reference points and property monuments, and shall make no changes or relocations without the prior written approval of Owner. Contractor shall report to Engineer whenever any reference point or property monument is lost or destroyed or requires relocation because of necessary changes in grades or locations, and shall be responsible for the accurate replacement or relocation of such reference points or property monuments by professionally qualified personnel.

4.04 *Progress Schedule*

A. Contractor shall adhere to the Progress Schedule established in accordance with Paragraph 2.05 as it may be adjusted from time to time as provided below.

1. Contractor shall submit to Engineer for acceptance (to the extent indicated in Paragraph 2.05) proposed adjustments in the Progress Schedule that will not result in changing the Contract Times.

error, ambiguity, or discrepancy is resolved, by a clarification or interpretation by Engineer, or by an amendment or supplement to the Contract Documents issued pursuant to Paragraph 11.01.

2. *Contractor's Review of Contract Documents*: If, before or during the performance of the Work, Contractor discovers any conflict, error, ambiguity, or discrepancy within the Contract Documents, or between the Contract Documents and (a) any applicable Law or Regulation, (b) actual field conditions, (c) any standard specification, manual, reference standard, or code, or (d) any instruction of any Supplier, then Contractor shall promptly report it to Engineer in writing. Contractor shall not proceed with the Work affected thereby (except in an emergency as required by Paragraph 7.15) until the conflict, error, ambiguity, or discrepancy is resolved, by a clarification or interpretation by Engineer, or by an amendment or supplement to the Contract Documents issued pursuant to Paragraph 11.01.

3. Contractor shall not be liable to Owner or Engineer for failure to report any conflict, error, ambiguity, or discrepancy in the Contract Documents unless Contractor had actual knowledge thereof.

B. *Resolving Discrepancies*:

1. Except as may be otherwise specifically stated in the Contract Documents, the provisions of the part of the Contract Documents prepared by or for Engineer shall take precedence in resolving any conflict, error, ambiguity, or discrepancy between such provisions of the Contract Documents and:

   a. the provisions of any standard specification, manual, reference standard, or code, or the instruction of any Supplier (whether or not specifically incorporated by reference as a Contract Document); or

   b. the provisions of any Laws or Regulations applicable to the performance of the Work (unless such an interpretation of the provisions of the Contract Documents would result in violation of such Law or Regulation).

3.04 *Requirements of the Contract Documents*

A. During the performance of the Work and until final payment, Contractor and Owner shall submit to the Engineer all matters in question concerning the requirements of the Contract Documents (sometimes referred to as requests for information or interpretation—RFIs), or relating to the acceptability of the Work under the Contract Documents, as soon as possible after such matters arise. Engineer will be the initial interpreter of the requirements of the Contract Documents, and judge of the acceptability of the Work thereunder.

B. Engineer will, with reasonable promptness, render a written clarification, interpretation, or decision on the issue submitted, or initiate an amendment or supplement to the Contract Documents. Engineer's written clarification, interpretation, or decision will be final and binding on Contractor, unless it appeals by submitting a Change Proposal, and on Owner, unless it appeals by filing a Claim.

C. If a submitted matter in question concerns terms and conditions of the Contract Documents that do not involve (1) the performance or acceptability of the Work under the Contract Documents, (2) the design (as set forth in the Drawings, Specifications, or otherwise), or (3) other engineering or technical matters, then Engineer will promptly give written notice to Owner and Contractor that Engineer is unable to provide a decision or interpretation. If Owner and Contractor are unable to agree on resolution of such a matter in question, either party may pursue resolution as provided in Article 12.

computer hardware differing from those used in the drafting or transmittal of the items, or from those established in applicable transmittal protocols.

ARTICLE 3 – DOCUMENTS: INTENT, REQUIREMENTS, REUSE

3.01 *Intent*

A. The Contract Documents are complementary; what is required by one is as binding as if required by all.

B. It is the intent of the Contract Documents to describe a functionally complete project (or part thereof) to be constructed in accordance with the Contract Documents.

C. Unless otherwise stated in the Contract Documents, if there is a discrepancy between the electronic or digital versions of the Contract Documents (including any printed copies derived from such electronic or digital versions) and the printed record version, the printed record version shall govern.

D. The Contract supersedes prior negotiations, representations, and agreements, whether written or oral.

E. Engineer will issue clarifications and interpretations of the Contract Documents as provided herein.

3.02 *Reference Standards*

A. Standards Specifications, Codes, Laws and Regulations

1. Reference in the Contract Documents to standard specifications, manuals, reference standards, or codes of any technical society, organization, or association, or to Laws or Regulations, whether such reference be specific or by implication, shall mean the standard specification, manual, reference standard, code, or Laws or Regulations in effect at the time of opening of Bids (or on the Effective Date of the Contract if there were no Bids), except as may be otherwise specifically stated in the Contract Documents.

2. No provision of any such standard specification, manual, reference standard, or code, or any instruction of a Supplier, shall be effective to change the duties or responsibilities of Owner, Contractor, or Engineer, or any of their subcontractors, consultants, agents, or employees, from those set forth in the part of the Contract Documents prepared by or for Engineer. No such provision or instruction shall be effective to assign to Owner, Engineer, or any of their officers, directors, members, partners, employees, agents, consultants, or subcontractors, any duty or authority to supervise or direct the performance of the Work or any duty or authority to undertake responsibility inconsistent with the provisions of the part of the Contract Documents prepared by or for Engineer.

3.03 *Reporting and Resolving Discrepancies*

A. *Reporting Discrepancies*:

1. *Contractor's Verification of Figures and Field Measurements*: Before undertaking each part of the Work, Contractor shall carefully study the Contract Documents, and check and verify pertinent figures and dimensions therein, particularly with respect to applicable field measurements. Contractor shall promptly report in writing to Engineer any conflict, error, ambiguity, or discrepancy that Contractor discovers, or has actual knowledge of, and shall not proceed with any Work affected thereby until the conflict,

3. a preliminary Schedule of Values for all of the Work which includes quantities and prices of items which when added together equal the Contract Price and subdivides the Work into component parts in sufficient detail to serve as the basis for progress payments during performance of the Work. Such prices will include an appropriate amount of overhead and profit applicable to each item of Work.

2.04 *Preconstruction Conference; Designation of Authorized Representatives*

A. Before any Work at the Site is started, a conference attended by Owner, Contractor, Engineer, and others as appropriate will be held to establish a working understanding among the parties as to the Work and to discuss the schedules referred to in Paragraph 2.03.A, procedures for handling Shop Drawings, Samples, and other submittals, processing Applications for Payment, electronic or digital transmittals, and maintaining required records.

B. At this conference Owner and Contractor each shall designate, in writing, a specific individual to act as its authorized representative with respect to the services and responsibilities under the Contract. Such individuals shall have the authority to transmit and receive information, render decisions relative to the Contract, and otherwise act on behalf of each respective party.

2.05 *Initial Acceptance of Schedules*

A. At least 10 days before submission of the first Application for Payment a conference, attended by Contractor, Engineer, and others as appropriate, will be held to review for acceptability to Engineer as provided below the schedules submitted in accordance with Paragraph 2.03.A. Contractor shall have an additional 10 days to make corrections and adjustments and to complete and resubmit the schedules. No progress payment shall be made to Contractor until acceptable schedules are submitted to Engineer.

1. The Progress Schedule will be acceptable to Engineer if it provides an orderly progression of the Work to completion within the Contract Times. Such acceptance will not impose on Engineer responsibility for the Progress Schedule, for sequencing, scheduling, or progress of the Work, nor interfere with or relieve Contractor from Contractor's full responsibility therefor.

2. Contractor's Schedule of Submittals will be acceptable to Engineer if it provides a workable arrangement for reviewing and processing the required submittals.

3. Contractor's Schedule of Values will be acceptable to Engineer as to form and substance if it provides a reasonable allocation of the Contract Price to the component parts of the Work.

2.06 *Electronic Transmittals*

A. Except as otherwise stated elsewhere in the Contract, the Owner, Engineer, and Contractor may transmit, and shall accept, Project-related correspondence, text, data, documents, drawings, information, and graphics, including but not limited to Shop Drawings and other submittals, in electronic media or digital format, either directly, or through access to a secure Project website.

B. If the Contract does not establish protocols for electronic or digital transmittals, then Owner, Engineer, and Contractor shall jointly develop such protocols.

C. When transmitting items in electronic media or digital format, the transmitting party makes no representations as to long term compatibility, usability, or readability of the items resulting from the recipient's use of software application packages, operating systems, or

3. The words "perform" or "provide," when used in connection with services, materials, or equipment, shall mean to furnish and install said services, materials, or equipment complete and ready for intended use.

4. If the Contract Documents establish an obligation of Contractor with respect to specific services, materials, or equipment, but do not expressly use any of the four words "furnish," "install," "perform," or "provide," then Contractor shall furnish and install said services, materials, or equipment complete and ready for intended use.

F. Unless stated otherwise in the Contract Documents, words or phrases that have a well-known technical or construction industry or trade meaning are used in the Contract Documents in accordance with such recognized meaning.

ARTICLE 2 – PRELIMINARY MATTERS

2.01 *Delivery of Bonds and Evidence of Insurance*

A. *Bonds*: When Contractor delivers the executed counterparts of the Agreement to Owner, Contractor shall also deliver to Owner such bonds as Contractor may be required to furnish.

B. *Evidence of Contractor's Insurance*: When Contractor delivers the executed counterparts of the Agreement to Owner, Contractor shall also deliver to Owner, with copies to each named insured and additional insured (as identified in the Supplementary Conditions or elsewhere in the Contract), the certificates and other evidence of insurance required to be provided by Contractor in accordance with Article 6.

C. *Evidence of Owner's Insurance*: After receipt of the executed counterparts of the Agreement and all required bonds and insurance documentation, Owner shall promptly deliver to Contractor, with copies to each named insured and additional insured (as identified in the Supplementary Conditions or otherwise), the certificates and other evidence of insurance required to be provided by Owner under Article 6.

2.02 *Copies of Documents*

A. Owner shall furnish to Contractor four printed copies of the Contract (including one fully executed counterpart of the Agreement), and one copy in electronic portable document format (PDF). Additional printed copies will be furnished upon request at the cost of reproduction.

B. Owner shall maintain and safeguard at least one original printed record version of the Contract, including Drawings and Specifications signed and sealed by Engineer and other design professionals. Owner shall make such original printed record version of the Contract available to Contractor for review. Owner may delegate the responsibilities under this provision to Engineer.

2.03 *Before Starting Construction*

A. *Preliminary Schedules*: Within 10 days after the Effective Date of the Contract (or as otherwise specifically required by the Contract Documents), Contractor shall submit to Engineer for timely review:

1. a preliminary Progress Schedule indicating the times (numbers of days or dates) for starting and completing the various stages of the Work, including any Milestones specified in the Contract;

2. a preliminary Schedule of Submittals; and

48. *Work Change Directive*—A written directive to Contractor issued on or after the Effective Date of the Contract, signed by Owner and recommended by Engineer, ordering an addition, deletion, or revision in the Work.

1.02 *Terminology*

A. The words and terms discussed in the following paragraphs are not defined but, when used in the Bidding Requirements or Contract Documents, have the indicated meaning.

B. *Intent of Certain Terms or Adjectives*:

1. The Contract Documents include the terms "as allowed," "as approved," "as ordered," "as directed" or terms of like effect or import to authorize an exercise of professional judgment by Engineer. In addition, the adjectives "reasonable," "suitable," "acceptable," "proper," "satisfactory," or adjectives of like effect or import are used to describe an action or determination of Engineer as to the Work. It is intended that such exercise of professional judgment, action, or determination will be solely to evaluate, in general, the Work for compliance with the information in the Contract Documents and with the design concept of the Project as a functioning whole as shown or indicated in the Contract Documents (unless there is a specific statement indicating otherwise). The use of any such term or adjective is not intended to and shall not be effective to assign to Engineer any duty or authority to supervise or direct the performance of the Work, or any duty or authority to undertake responsibility contrary to the provisions of Article 10 or any other provision of the Contract Documents.

C. *Day*:

1. The word "day" means a calendar day of 24 hours measured from midnight to the next midnight.

D. *Defective*:

1. The word "defective," when modifying the word "Work," refers to Work that is unsatisfactory, faulty, or deficient in that it:

a. does not conform to the Contract Documents; or

b. does not meet the requirements of any applicable inspection, reference standard, test, or approval referred to in the Contract Documents; or

c. has been damaged prior to Engineer's recommendation of final payment (unless responsibility for the protection thereof has been assumed by Owner at Substantial Completion in accordance with Paragraph 15.03 or 15.04).

E. *Furnish, Install, Perform, Provide*:

1. The word "furnish," when used in connection with services, materials, or equipment, shall mean to supply and deliver said services, materials, or equipment to the Site (or some other specified location) ready for use or installation and in usable or operable condition.

2. The word "install," when used in connection with services, materials, or equipment, shall mean to put into use or place in final position said services, materials, or equipment complete and ready for intended use.

37. *Site*—Lands or areas indicated in the Contract Documents as being furnished by Owner upon which the Work is to be performed, including rights-of-way and easements, and such other lands furnished by Owner which are designated for the use of Contractor.

38. *Specifications*—The part of the Contract that consists of written requirements for materials, equipment, systems, standards, and workmanship as applied to the Work, and certain administrative requirements and procedural matters applicable to the Work.

39. *Subcontractor*—An individual or entity having a direct contract with Contractor or with any other Subcontractor for the performance of a part of the Work.

40. *Substantial Completion*—The time at which the Work (or a specified part thereof) has progressed to the point where, in the opinion of Engineer, the Work (or a specified part thereof) is sufficiently complete, in accordance with the Contract Documents, so that the Work (or a specified part thereof) can be utilized for the purposes for which it is intended. The terms "substantially complete" and "substantially completed" as applied to all or part of the Work refer to Substantial Completion thereof.

41. *Successful Bidder*—The Bidder whose Bid the Owner accepts, and to which the Owner makes an award of contract, subject to stated conditions.

42. *Supplementary Conditions*—The part of the Contract that amends or supplements these General Conditions.

43. *Supplier*—A manufacturer, fabricator, supplier, distributor, materialman, or vendor having a direct contract with Contractor or with any Subcontractor to furnish materials or equipment to be incorporated in the Work by Contractor or a Subcontractor.

44. *Technical Data*—Those items expressly identified as Technical Data in the Supplementary Conditions, with respect to either (a) subsurface conditions at the Site, or physical conditions relating to existing surface or subsurface structures at the Site (except Underground Facilities) or (b) Hazardous Environmental Conditions at the Site. If no such express identifications of Technical Data have been made with respect to conditions at the Site, then the data contained in boring logs, recorded measurements of subsurface water levels, laboratory test results, and other factual, objective information regarding conditions at the Site that are set forth in any geotechnical or environmental report prepared for the Project and made available to Contractor are hereby defined as Technical Data with respect to conditions at the Site under Paragraphs 5.03, 5.04, and 5.06.

45. *Underground Facilities*—All underground pipelines, conduits, ducts, cables, wires, manholes, vaults, tanks, tunnels, or other such facilities or attachments, and any encasements containing such facilities, including but not limited to those that convey electricity, gases, steam, liquid petroleum products, telephone or other communications, fiber optic transmissions, cable television, water, wastewater, storm water, other liquids or chemicals, or traffic or other control systems.

46. *Unit Price Work*—Work to be paid for on the basis of unit prices.

47. *Work*—The entire construction or the various separately identifiable parts thereof required to be provided under the Contract Documents. Work includes and is the result of performing or providing all labor, services, and documentation necessary to produce such construction; furnishing, installing, and incorporating all materials and equipment into such construction; and may include related services such as testing, start-up, and commissioning, all as required by the Contract Documents.

24. *Liens*—Charges, security interests, or encumbrances upon Contract-related funds, real property, or personal property.

25. *Milestone*—A principal event in the performance of the Work that the Contract requires Contractor to achieve by an intermediate completion date or by a time prior to Substantial Completion of all the Work.

26. *Notice of Award*—The written notice by Owner to a Bidder of Owner's acceptance of the Bid.

27. *Notice to Proceed*—A written notice by Owner to Contractor fixing the date on which the Contract Times will commence to run and on which Contractor shall start to perform the Work.

28. *Owner*—The individual or entity with which Contractor has contracted regarding the Work, and which has agreed to pay Contractor for the performance of the Work, pursuant to the terms of the Contract.

29. *Progress Schedule*—A schedule, prepared and maintained by Contractor, describing the sequence and duration of the activities comprising the Contractor's plan to accomplish the Work within the Contract Times.

30. *Project*—The total undertaking to be accomplished for Owner by engineers, contractors, and others, including planning, study, design, construction, testing, commissioning, and start-up, and of which the Work to be performed under the Contract Documents is a part.

31. *Project Manual*—The written documents prepared for, or made available for, procuring and constructing the Work, including but not limited to the Bidding Documents or other construction procurement documents, geotechnical and existing conditions information, the Agreement, bond forms, General Conditions, Supplementary Conditions, and Specifications. The contents of the Project Manual may be bound in one or more volumes.

32. *Resident Project Representative*—The authorized representative of Engineer assigned to assist Engineer at the Site. As used herein, the term Resident Project Representative or "RPR" includes any assistants or field staff of Resident Project Representative.

33. *Samples*—Physical examples of materials, equipment, or workmanship that are representative of some portion of the Work and that establish the standards by which such portion of the Work will be judged.

34. *Schedule of Submittals*—A schedule, prepared and maintained by Contractor, of required submittals and the time requirements for Engineer's review of the submittals and the performance of related construction activities.

35. *Schedule of Values*—A schedule, prepared and maintained by Contractor, allocating portions of the Contract Price to various portions of the Work and used as the basis for reviewing Contractor's Applications for Payment.

36. *Shop Drawings*—All drawings, diagrams, illustrations, schedules, and other data or information that are specifically prepared or assembled by or for Contractor and submitted by Contractor to illustrate some portion of the Work. Shop Drawings, whether approved or not, are not Drawings and are not Contract Documents.

has declined to address. A demand for money or services by a third party is not a Claim.

11. *Constituent of Concern*—Asbestos, petroleum, radioactive materials, polychlorinated biphenyls (PCBs), hazardous waste, and any substance, product, waste, or other material of any nature whatsoever that is or becomes listed, regulated, or addressed pursuant to (a) the Comprehensive Environmental Response, Compensation and Liability Act, 42 U.S.C. §§9601 et seq. ("CERCLA"); (b) the Hazardous Materials Transportation Act, 49 U.S.C. §§5101 et seq.; (c) the Resource Conservation and Recovery Act, 42 U.S.C. §§6901 et seq. ("RCRA"); (d) the Toxic Substances Control Act, 15 U.S.C. §§2601 et seq.; (e) the Clean Water Act, 33 U.S.C. §§1251 et seq.; (f) the Clean Air Act, 42 U.S.C. §§7401 et seq.; or (g) any other federal, state, or local statute, law, rule, regulation, ordinance, resolution, code, order, or decree regulating, relating to, or imposing liability or standards of conduct concerning, any hazardous, toxic, or dangerous waste, substance, or material.

12. *Contract*—The entire and integrated written contract between the Owner and Contractor concerning the Work.

13. *Contract Documents*—Those items so designated in the Agreement, and which together comprise the Contract.

14. *Contract Price*—The money that Owner has agreed to pay Contractor for completion of the Work in accordance with the Contract Documents. .

15. *Contract Times*—The number of days or the dates by which Contractor shall: (a) achieve Milestones, if any; (b) achieve Substantial Completion; and (c) complete the Work.

16. *Contractor*—The individual or entity with which Owner has contracted for performance of the Work.

17. *Cost of the Work*—See Paragraph 13.01 for definition.

18. *Drawings*—The part of the Contract that graphically shows the scope, extent, and character of the Work to be performed by Contractor.

19. *Effective Date of the Contract*—The date, indicated in the Agreement, on which the Contract becomes effective.

20. *Engineer*—The individual or entity named as such in the Agreement.

21. *Field Order*—A written order issued by Engineer which requires minor changes in the Work but does not change the Contract Price or the Contract Times.

22. *Hazardous Environmental Condition*—The presence at the Site of Constituents of Concern in such quantities or circumstances that may present a danger to persons or property exposed thereto. The presence at the Site of materials that are necessary for the execution of the Work, or that are to be incorporated in the Work, and that are controlled and contained pursuant to industry practices, Laws and Regulations, and the requirements of the Contract, does not establish a Hazardous Environmental Condition.

23. *Laws and Regulations; Laws or Regulations*—Any and all applicable laws, statutes, rules, regulations, ordinances, codes, and orders of any and all governmental bodies, agencies, authorities, and courts having jurisdiction.

ARTICLE 1 – DEFINITIONS AND TERMINOLOGY

1.01 *Defined Terms*

A. Wherever used in the Bidding Requirements or Contract Documents, a term printed with initial capital letters, including the term's singular and plural forms, will have the meaning indicated in the definitions below. In addition to terms specifically defined, terms with initial capital letters in the Contract Documents include references to identified articles and paragraphs, and the titles of other documents or forms.

1. *Addenda*—Written or graphic instruments issued prior to the opening of Bids which clarify, correct, or change the Bidding Requirements or the proposed Contract Documents.

2. *Agreement*—The written instrument, executed by Owner and Contractor, that sets forth the Contract Price and Contract Times, identifies the parties and the Engineer, and designates the specific items that are Contract Documents.

3. *Application for Payment*—The form acceptable to Engineer which is to be used by Contractor during the course of the Work in requesting progress or final payments and which is to be accompanied by such supporting documentation as is required by the Contract Documents.

4. *Bid*—The offer of a Bidder submitted on the prescribed form setting forth the prices for the Work to be performed.

5. *Bidder*—An individual or entity that submits a Bid to Owner.

6. *Bidding Documents*—The Bidding Requirements, the proposed Contract Documents, and all Addenda.

7. *Bidding Requirements*—The advertisement or invitation to bid, Instructions to Bidders, Bid Bond or other Bid security, if any, the Bid Form, and the Bid with any attachments.

8. *Change Order*—A document which is signed by Contractor and Owner and authorizes an addition, deletion, or revision in the Work or an adjustment in the Contract Price or the Contract Times, or other revision to the Contract, issued on or after the Effective Date of the Contract.

9. *Change Proposal*—A written request by Contractor, duly submitted in compliance with the procedural requirements set forth herein, seeking an adjustment in Contract Price or Contract Times, or both; contesting an initial decision by Engineer concerning the requirements of the Contract Documents or the acceptability of Work under the Contract Documents; challenging a set-off against payments due; or seeking other relief with respect to the terms of the Contract.

10. *Claim*—(a) A demand or assertion by Owner directly to Contractor, duly submitted in compliance with the procedural requirements set forth herein: seeking an adjustment of Contract Price or Contract Times, or both; contesting an initial decision by Engineer concerning the requirements of the Contract Documents or the acceptability of Work under the Contract Documents; contesting Engineer's decision regarding a Change Proposal; seeking resolution of a contractual issue that Engineer has declined to address; or seeking other relief with respect to the terms of the Contract; or (b) a demand or assertion by Contractor directly to Owner, duly submitted in compliance with the procedural requirements set forth herein, contesting Engineer's decision regarding a Change Proposal; or seeking resolution of a contractual issue that Engineer

STANDARD GENERAL CONDITIONS OF THE CONSTRUCTION CONTRACT

TABLE OF CONTENTS

These General Conditions have been prepared for use with the Agreement Between Owner and Contractor for Construction Contract (EJCDC® C-520, Stipulated Sum, or C-525, Cost-Plus, 2013 Editions). Their provisions are interrelated and a change in one may necessitate a change in the other.

To prepare supplementary conditions that are coordinated with the General Conditions, use EJCDC's Guide to the Preparation of Supplementary Conditions (EJCDC® C-800, 2013 Edition). The full EJCDC Construction series of documents is discussed in the Commentary on the 2013 EJCDC Construction Documents (EJCDC® C-001, 2013 Edition).

National Society of Professional Engineers

1420 King Street, Alexandria, VA 22314-2794

(703) 684-2882

www.nspe.org

American Council of Engineering Companies

1015 15th Street N.W., Washington, DC 20005

(202) 347-7474

www.acec.org

American Society of Civil Engineers

1801 Alexander Bell Drive, Reston, VA 20191-4400

(800) 548-2723

www.asce.org

NOTE: EJCDC publications may be purchased at www.ejcdc.org, or from any of the sponsoring organizations above.

This document has important legal consequences; consultation with an attorney is encouraged with respect to its use or modification. This document should be adapted to the particular circumstances of the contemplated Project and the controlling Laws and Regulations.

STANDARD GENERAL CONDITIONS OF THE CONSTRUCTION CONTRACT

Prepared by

EJCDC®

ENGINEERS JOINT CONTRACT DOCUMENTS COMMITTEE

Issued and Published Jointly by

ACEC

AMERICAN COUNCIL OF ENGINEERING COMPANIES

ASCE

AMERICAN SOCIETY OF CIVIL ENGINEERS

National Society of Professional Engineers®

Endorsed by

CSI NUCA

(This page is intentionally left blank)

SECTION 504 CERTIFICATION

POLICY OF NONDISCRIMINATION ON THE BASIS OF DISABILITY

The Patterson Professional Services does not discriminate on the basis of disability status in the admission or access to, or treatment or employment in, its federally assisted programs or activities.

(Name) Patterson Professional Services

(Address) P.O. Box 910

Collinsville, TX 76233

City State Zip

Telephone Number (903) 429 - 3008 Voice

( ) _____ - _____ TDD

Mark Patterson has been designated to coordinate compliance with the nondiscrimination requirements contained in the Department of Housing and Urban Development's (HUD) regulations implementing Section 504 (24 CFR Part 8. dated June 2, 1988).

	D. The contractor agrees to include this section 3 clause in every subcontract subject to compliance with regulations in 24 CFR part 135, and agrees to take appropriate action, as provided in an applicable provision of the subcontract or in this section 3 clause, upon a finding that the subcontractor is in violation of the regulations in 24 CFR part 135. The contractor will not subcontract with any subcontractor where the contractor has notice or knowledge that the subcontractor has been found in violation of the regulations in 24 CFR part 135. E. The contractor will certify that any vacant employment positions, including training positions, that are filled (1) after the contractor is selected but before the contract is executed, and (2) with persons other than those to whom the regulations of 24 CFR part 135 require employment opportunities to be directed, were not filled to circumvent the contractor's obligations under 24 CFR part 135. F. Noncompliance with HUD's regulations in 24 CFR part 135 may result in sanctions, termination of this contract for default, and debarment or suspension from future HUD assisted contracts. G. With respect to work performed in connection with section 3 covered Indian housing assistance, section 7(b) of the Indian Self-Determination and Education Assistance Act (25 U.S.C. 450e) also applies to the work to be performed under this contract. Section 7(b) requires that to the greatest extent feasible (i) preference and opportunities for training and employment shall be given to Indians, and (ii) preference in the award of contracts and subcontracts shall be given to Indian organizations and Indian-owned Economic Enterprises. Parties to this contract that are subject to the provisions of section 3 and section 7(b) agree to comply with section 3 to the maximum extent feasible, but not in derogation of compliance with section 7(b).	
>$150,000	(G) Clean Air Act (42 U.S.C. 7401–7671q.) and the Federal Water Pollution Control Act (33 U.S.C. 1251–1387), as amended—Contracts and subgrants of amounts in excess of $150,000 must contain a provision that requires the non-Federal award to agree to comply with all applicable standards, orders or regulations issued pursuant to the Clean Air Act (42 U.S.C. 7401–7671q) and the Federal Water Pollution Control Act as amended (33 U.S.C. 1251–1387). Violations must be reported to the Federal awarding agency and the Regional Office of the Environmental Protection Agency (EPA).	2 CFR 200 APPENDIX II (G)

≥$100,000	(I) Byrd Anti-Lobbying Amendment (31 U.S.C. 1352)—Contractors that apply or bid for an award of $100,000 or more must file the required certification. Each tier certifies to the tier above that it will not and has not used Federal appropriated funds to pay any person or organization for influencing or attempting to influence an officer or employee of any agency, a member of Congress, officer or employee of Congress, or an employee of a member of Congress in connection with obtaining any Federal contract, grant or any other award covered by 31 U.S.C. 1352. Each tier must also disclose any lobbying with non-Federal funds that takes place in connection with obtaining any Federal award. Such disclosures are forwarded from tier to tier up to the non-Federal award.	2 CFR 200 APPENDIX II (I) and 24 CFR §570.303
>$100,000 (Satisfied with inclusion of HUD 4010)	(E) Contract Work Hours and Safety Standards Act (40 U.S.C. 3701–3708). Where applicable, all contracts awarded by the non-Federal entity in excess of $100,000 that involve the employment of mechanics or laborers must include a provision for compliance with 40 U.S.C. 3702 and 3704, as supplemented by Department of Labor regulations (29 CFR Part 5). Under 40 U.S.C. 3702 of the Act, each contractor must be required to compute the wages of every mechanic and laborer on the basis of a standard work week of 40 hours. Work in excess of the standard work week is permissible provided that the worker is compensated at a rate of not less than one and a half times the basic rate of pay for all hours worked in excess of 40 hours in the work week. The requirements of 40 U.S.C. 3704 are applicable to construction work and provide that no laborer or mechanic must be required to work in surroundings or under working conditions which are unsanitary, hazardous or dangerous. These requirements do not apply to the purchases of supplies or materials or articles ordinarily available on the open market, or contracts for transportation or transmission of intelligence.	2 CFR 200 APPENDIX II (E)
>$100,000 for contracts (And federal assistance >$200,000)	*§135.38 Section 3 clause* *All section 3 covered contracts shall include the following clause (referred to as the section 3 clause):* A. The work to be performed under this contract is subject to the requirements of section 3 of the Housing and Urban Development Act of 1968, as amended, 12 U.S.C. 1701u (Section 3). The purpose of section 3 is to ensure that employment and other economic opportunities generated by HUD assistance or HUD-assisted projects covered by section 3, shall, to the greatest extent feasible, be directed to low- and very low-income persons, particularly persons who are recipients of HUD assistance for housing. B. The parties to this contract agree to comply with HUD's regulations in 24 CFR part 135, which implement section 3. As evidenced by their execution of this contract, the parties to this contract certify that they are under no contractual or other impediment that would prevent them from complying with the part 135 regulations. C. The contractor agrees to send to each labor organization or representative of workers with which the contractor has a collective bargaining agreement or other understanding, if any, a notice advising the labor organization or workers' representative of the contractor's commitments under this section 3 clause, and will post copies of the notice in conspicuous places at the work site where both employees and applicants for training and employment positions can see the notice. The notice shall describe the section 3 preference, shall set forth minimum number and job titles subject to hire, availability of apprenticeship and training positions, the qualifications for each; and the name and location of the person(s) taking applications for each of the positions; and the anticipated date the work shall begin.	24 CFR §135.38

subcontractor or vendor. The contractor will take such action with respect to any subcontract or purchase order as the administering agency may direct as a means of enforcing such provisions, including sanctions for noncompliance: Provided, however, That in the event a contractor becomes involved in, or is threatened with, litigation with a subcontractor or vendor as a result of such direction by the administering agency the contractor may request the United States to enter into such litigation to protect the interests of the United States.

The applicant further agrees that it will be bound by the above equal opportunity clause with respect to its own employment practices when it participates in federally assisted construction work: Provided, That if the applicant so participating is a State or local government, the above equal opportunity clause is not applicable to any agency, instrumentality or subdivision of such government which does not participate in work on or under the contract.

The applicant agrees that it will assist and cooperate actively with the administering agency and the Secretary of Labor in obtaining the compliance of contractors and subcontractors with the equal opportunity clause and the rules, regulations, and relevant orders of the Secretary of Labor, that it will furnish the administering agency and the Secretary of Labor such information as they may require for the supervision of such compliance, and that it will otherwise assist the administering agency in the discharge of the agency's primary responsibility for securing compliance.

The applicant further agrees that it will refrain from entering into any contract or contract modification subject to Executive Order 11246 of September 24, 1965, with a contractor debarred from, or who has not demonstrated eligibility for, Government contracts and federally assisted construction contracts pursuant to the Executive order and will carry out such sanctions and penalties for violation of the equal opportunity clause as may be imposed upon contractors and subcontractors by the administering agency or the Secretary of Labor pursuant to Part II, Subpart D of the Executive order. In addition, the applicant agrees that if it fails or refuses to comply with these undertakings, the administering agency may take any or all of the following actions: Cancel, terminate, or suspend in whole or in part this grant (contract, loan, insurance, guarantee); refrain from extending any further assistance to the applicant under the program with respect to which the failure or refund occurred until satisfactory assurance of future compliance has been received from such applicant; and refer the case to the Department of Justice for appropriate legal proceedings.

(c) Subcontracts. Each nonexempt prime contractor or subcontractor shall include the equal opportunity clause in each of its nonexempt subcontracts.

(d) Incorporation by reference. The equal opportunity clause may be incorporated by reference in all Government contracts and subcontracts, including Government bills of lading, transportation requests, contracts for deposit of Government funds, and contracts for issuing and paying U.S. savings bonds and notes, and such other contracts and subcontracts as the Deputy Assistant Secretary may designate.

(e) Incorporation by operation of the order. By operation of the order, the equal opportunity clause shall be considered to be a part of every contract and subcontract required by the order and the regulations in this part to include such a clause whether or not it is physically incorporated in such contracts and whether or not the contract between the agency and the contractor is written.

(f) Adaptation of language. Such necessary changes in language may be made in the equal opportunity clause as shall be appropriate to identify properly the parties and their undertakings.

[43 FR 49240, Oct. 20, 1978, as amended at 62 FR 66971, Dec. 22, 1997; 79 FR 72993, Dec. 9, 2014; 80 FR 54934, September 11, 2015]

identity, or national origin. The contractor will take affirmative action to ensure that applicants are employed, and that employees are treated during employment without regard to their race, color, religion, sex, sexual orientation, gender identity, or national origin. Such action shall include, but not be limited to the following: Employment, upgrading, demotion, or transfer; recruitment or recruitment advertising; layoff or termination; rates of pay or other forms of compensation; and selection for training, including apprenticeship. The contractor agrees to post in conspicuous places, available to employees and applicants for employment, notices to be provided setting forth the provisions of this nondiscrimination clause.

(2) The contractor will, in all solicitations or advertisements for employees placed by or on behalf of the contractor, state that all qualified applicants will receive considerations for employment without regard to race, color, religion, sex, sexual orientation, gender identity, or national origin.

(3) The Contractor will not discourage or in any other manner discriminate against any employee or applicant for employment because such employee or applicant has inquired about, discussed, or disclosed the compensation of the employee or applicant or another employee or applicant. This provision shall not apply to instances in which an employee who has access to the compensation information of other employees or applicants as a part of such employee's essential job functions discloses the compensation of such other employees or applicants to individuals who do not otherwise have access to such information, unless such disclosure is in response to a formal complaint or charge, in furtherance of an investigation, proceeding, hearing, or action, including an investigation conducted by the employer, or is consistent with the contractor's legal duty to furnish information.

(4) The contractor will send to each labor union or representative of workers with which he has a collective bargaining agreement or other contract or understanding, a notice to be provided advising the said labor union or workers' representatives of the contractor's commitments under this section, and shall post copies of the notice in conspicuous places available to employees and applicants for employment.

(5) The contractor will comply with all provisions of Executive Order 11246 of September 24, 1965, and of the rules, regulations, and relevant orders of the Secretary of Labor.

(6) The contractor will furnish all information and reports required by Executive Order 11246 of September 24, 1965, and by rules, regulations, and orders of the Secretary of Labor, or pursuant thereto, and will permit access to his books, records, and accounts by the administering agency and the Secretary of Labor for purposes of investigation to ascertain compliance with such rules, regulations, and orders.

(7) In the event of the contractor's noncompliance with the nondiscrimination clauses of this contract or with any of the said rules, regulations, or orders, this contract may be canceled, terminated, or suspended in whole or in part and the contractor may be declared ineligible for further Government contracts or federally assisted construction contracts in accordance with procedures authorized in Executive Order 11246 of September 24, 1965, and such other sanctions may be imposed and remedies invoked as provided in Executive Order 11246 of September 24, 1965, or by rule, regulation, or order of the Secretary of Labor, or as otherwise provided by law.

(8) The contractor will include the portion of the sentence immediately preceding paragraph (1) and the provisions of paragraphs (1) through (7) in every subcontract or purchase order unless exempted by rules, regulations, or orders of the Secretary of Labor issued pursuant to section 204 of Executive Order 11246 of September 24, 1965, so that such provisions will be binding upon each

being used. The OWNER will also require the CONTRACTOR to obtain a written, notarized certification from the landowner of each proposed off-site soil borrow source stating that to the best of the landowner's knowledge and belief there has never been contamination of the borrow source site with hazardous or toxic materials. The certification shall be furnished to the OWNER prior to proceeding to furnish soils to the site. The CONTRACTOR shall be required to provide the services of an EPA approved laboratory to perform, as a minimum, a toxic contaminant scan of composite soil. Samples representative of each separate proposed borrow source, in accordance with EPA protocol for the list of contaminants contained in the 40 CFR, Part 261, Appendix VIII, by EPA methods SW-846, prior to importing the soil borrow. Any potential off-site borrow on which the test results indicate the presence of contaminants above background levels shall be rejected. Soil materials derived from the excavation of underground petroleum storage tanks shall not be used as fill on this project.

3.10 EXCAVATION

A. Temporary slopes of 2-horizontal to 1-vertical and flatter shall be used for this site. In all cases, the requirements of the Occupational Safety and Health Administration (OSHA) must be followed. The CONTRACTOR shall monitor the slope stability by observation and measurement, and to prevent excessive loads (especially heavy vibratory loads) from being applied to the slope. The CONTRACTOR shall be responsible for maintaining the slopes in a safe condition during construction and the use of slope stability monitoring equipment shall be used.

B. The side slopes of excavations through the overburden soils shall be made in such a manner to provide for their stability during construction. Structures, pipelines or other facilities which are constructed prior to or during the currently proposed construction and which require excavation, shall be protected from loss of end bearing or lateral support.

C. Temporary construction slopes and/or permanent embankment slopes shall be protected from surface runoff water. Site grading shall be designed to allow drainage at planned areas where erosion protection is provided, instead of allowing surface water to flow down unprotected slopes.

D. Drainage: During excavation, maintain grades for complete drainage. Install temporary drains or drainage ditches as needed to intercept or divert surface water and prevent interference or delay the work. The pumping of water shall be included in the bid items. No separate payment will be made for drainage control and pumping.

E. The CONTRACTOR shall comply with all applicable safety regulations concerning trench safety and excavations, including, but not limited to OSHA regulations.

3.11 DEWATERING OF EXCAVATIONS

A. Ground water may be encountered within the excavations. The CONTRACTOR shall be responsible for selecting and providing appropriate excavation dewatering systems for use during construction.

B. The dewatering method selected shall be capable of lowering and continuously maintaining the ground water surface a minimum of 3 feet below the base of all excavations throughout the construction period. The CONTRACTOR shall be required to provide adequate personnel and equipment to operate and maintain the dewatering system on a 24-hour basis, as required.

3.12 SOIL CORROSION AND REACTION POTENTIAL

The clays at this site may be corrosive. Standard construction practices for protecting metal pipe and similar facilities in contact with these soils shall be used.

3.13 EROSION AND SEDIMENT CONTROL

All disturbed areas shall be protected from erosion and sedimentation during construction, and all permanent slopes and other areas subject to erosion or sedimentation shall be provided with permanent erosion and sediment control facilities. All applicable ordinances and codes regarding erosion and sediment control shall be followed.

END OF SECTION

G. Solid Rock: In order for any rock material to be considered as solid rock, it shall meet all of the following criteria:
   1. The rock shall be massive and in a continuous layer at least 2 feet thick.
   2. The rock shall have an unconfined compressive strength greater than 80 ksf.
   3. The rock shall not be able to be ripped from a starter trench in an open cut excavation with a D-9 "Caterpillar" (or equivalent) bulldozer with a single tooth ripper. Or in a trench excavation with a 235C "Caterpillar" (or equivalent) track hoe excavator equipped with a nominal 30-inch wide extreme service trenching bucket with front and rear mounted rock ripper teeth.

   Boulders and cobbles, whether in densely spaced layers or occasional occurrence, shall not be classified as solid rock, regardless of the hardness of the individual boulders or cobbles.

H. Compliance Testing Representative samples of the actual soil materials proposed for use in the various earth fill zones shall be initially tested for compliance with the recommendations by the project geotechnical engineer, prior to use of the materials as fill. The testing program shall continue through construction as a means to verify that the earth fill materials being placed continue to meet the recommended requirements.

3.8 EARTH FILL ZONE

A. Table 1 specifies for the various earth fill zones.

TABLE 1 – EARTH FILL ZONES

ITEM	ZONE	EARTH FILL MATERIAL
Embankment Fill for structures, pavements and flatwork	Top 10 Feet	Non-Expansive
Embankment Fill for structures, pavement and flatwork	Below 10 Feet	General
Structure Backfill	All	Non-Expansive
Trench Backfill beneath present or future structures, pavements and flatwork	All (exclusive of lean concrete or flowable fill zones)	Non-Expansive
Trench Backfill more than 5 feet outside the limits of present or future structures, pavements and flatwork	To 1 foot above top of pipe (exclusive of lean concrete or flowable fill zones)	Non-Expansive
Trench Backfill more than 5 feet outside the limits of present or future structures, pavements and flatwork	From 1 foot above top of pipe and upward pavements and flatwork	General
General Embankments more than 5 feet outside the limits of present and future structures, pavements	All	General
General Site Grading where no slopes or deep fills are involved	Top 1 Foot	General
General Site Grading where no slopes or deep fills are involved	Below 1 Foot	Common
Seepage plugs around pipes, and liners/barriers	All	Low-Permeability

B. Other specific recommendations for earth fill materials and for aggregate fill materials are also presented in other sections of these Specifications.

3.9 ACCEPTANCE OF IMPORTED FILL

Any soil imported from off-site sources shall be tested for compliance with the recommendations for the particular application and approved by the project geotechnical engineer prior to the materials

accomplished to help prevent drying and cracking of the backfill surface. The slope shall be maintained on a 1.5 to 3 percent gradient after topsoil is placed.

3.6 TRENCH BACKFILL

A. Trench backfill for pipelines or other utilities shall be properly placed and compacted. Non-expansive earth fill shall be used for trench backfill. Free draining granular material shall not be used. The non-expansive soil backfill shall be placed in approximate 4 to 6 inch loose lifts. The density and moisture content shall be as recommended for non-expansive fill in Subsection 3.4 Processing and Moisture-Density Control, of this specification, except all non-expansive backfill above the spring line of the pipes, in sections of the trench underneath pavements, shall be compacted to a minimum of 100 percent of maximum dry density (ASTM D698). In areas where granular backfill is used, it shall be compacted, with a vibratory compactor, to a minimum of 95 percent of maximum density as determined by ASTM D4253, at a moisture content that will facilitate compaction. A minimum of one field density test shall be taken per lift for each 150 linear feet of trench, with a minimum of two tests per lift. In restricted areas where compaction of non-expansive earth fill is not practical, flowable fill shall be used.

B. Where lean concrete fill or flowable fill is used, each lift or section shall be allowed to reach initial set as required to provide the intended support, prior to the next lift or section being placed. The lean concrete fill or flowable fill will not require compaction.

3.7 EARTH FILL AND FLOWABLE FILL MATERIALS

A. The following information is provided to define the requirements for the various earth fill and flowable fill materials for construction of the project:

B. Non-Expansive Earth Fill: The non-expansive earth fill shall consist of soil materials with a liquid limit of 35 or less, a plasticity index between 4 and 15, a minimum of 35 percent passing the No. 200 sieve, a minimum of 85 percent passing the No. 4 sieve, and which are free of organics or other deleterious materials. When compacted to the recommended moisture and density, the material shall have a maximum free swell value of 0.5 percent under a maximum seating pressure of 2 psi and a maximum hydraulic conductivity (permeability) of 1 E-05 cm/sec, as determined by laboratory testing of remolded specimens of the actual materials proposed for the non-expansive earth fill.

C. Low-Permeability Earth Fill: The low-permeability earth fill shall consist of soil materials classified as CH or CL in accordance with ASTM D2487 - *Classification of Soils for Engineering Purposes*. The materials also shall have a minimum liquid limit of 35, a minimum plasticity index of 18, a minimum of 85 percent passing the No. 4 sieve, and shall be free of organics or other deleterious materials. The material shall have Percent Dispersion of less than 20 when tested in accordance with ASTM D4221, STANDARD TEST METHOD FOR DISPERSIVE CHARACTERISTICS OF CLAY SOIL BY DOUBLE HYDROMETER. When compacted to the recommended moisture and density, the material shall have a maximum hydraulic conductivity of 1 E-07 cm/sec, as determined by laboratory testing of remoided specimens of the actual materials proposed for the low-permeability fill.

D. General Earth Fill: The general earth fill shall consist of any soil materials which have a minimum plasticity index of 8, a minimum of 20 percent passing the No. 200 sieve, a minimum of 85 percent passing the No. 4 sieve, and which are free of organics or other deleterious material.

E. Flowable Fill: Flowable fill shall consist of a low-cement content ready-mix material with high flow properties. The mix shall consist of approximately one part Portland cement to three parts fly ash, by weight with sufficient amounts of aggregate, high air generator or foaming agent, and water to produce a 28-day compressive strength in the range of 25 to 200 psi. The flowable fill shall have a maximum hydraulic conductivity of one (1) E-05 cm/sec after curing for seven (7) days. The material shall have an initial set time (walkable surface) of 24 hours or less. The flowable fill shall provide full support to pipeline, adjacent earth walls, structures, or other such facilities, after initial set, but shall be of a low enough compressive strength after reaching final strength to allow future excavation with ordinary small excavation equipment.

F. The CONTRACTOR shall be required to submit an appropriate mix design along with laboratory test results on the flowable fill prior to beginning work on this item.

3.4 PROCESSING AND MOISTURE-DENSITY CONTROL

A. Following the spreading and mixing of the soil on the embankment, it shall be processed by disking or pulverizing throughout its thickness to break up and reduce clod size, and provide additional blending of materials. Processing shall consist of at least five passes of a fully penetrating disc plow or three passes of a fully penetrating roto-till pulverize. Additional passes of the processing equipment shall be performed as necessary to accomplish breaking up, reduction of clod size, and blending the fill. Each successive pass of the processing equipment shall be in a direction perpendicular to the previous pass, where working space permits. The maximum recommended loose lift thickness prior to compaction is eight (8) inches. The moisture content of the soil shall be adjusted, if necessary, by either aeration or the addition of water to bring the moisture content within the recommended range. Water required for sprinkling to bring the fill material to the proper moisture content shall be applied evenly through each layer.

B. Any layers, which become damaged by weather conditions, shall be reprocessed to meet recommended requirements. The compacted surface of a layer of fill shall be lightly loosened by disking before the succeeding layer is placed.

C. When the moisture content and the condition of the fill layer are satisfactory, compaction shall be performed with a heavy tamping foot roller with fully penetrating feet (feet long enough to penetrate into the previous lift) towed either by a crawler-type tractor or by the self-propelled type. The tamping foot roller shall weigh no less than 2,000 pounds per linear foot of drum width. Vibratory tamping rollers are recommended for compacting sandier fill materials.

D. The in-place density of the fill shall be no less than 95 percent of the maximum dry density as determined by ASTM D698, Standard Proctor. At a moisture content between optimum and 5 percentage points wet of optimum moisture content for all low-permeability earth fill zones (liners, cores, etc.), and between 2 percentage points below to 5 percentage points above optimum moisture content for non-expansive earth fill zones and general earth fill zones. The moisture content and density of all fill material shall be maintained at the specified range of moisture and density. These moisture ranges represent the maximum limits. It is possible under some circumstances or with some soils, that a more narrow range, within the recommended limits, will be necessary to consistently achieve the recommended density. In order to help provide a homogeneous earth fill mass, a minimum of eight passes of the tamping foot roller shall be provided, even if the recommended density is achieved with fewer passes.

E. Field density tests (including moisture content) shall be taken as each lift of fill material is placed. A minimum of one field density test per lift for each 2,500 square feet of compacted area is required. For small or critical areas, the frequency of testing shall be reduced to one test per 1,000 square feet or less. A minimum of two density tests shall be taken on each lift, regardless of size. The earthwork operations will be observed and tested on a continuing basis by an experienced geotechnical technician working in conjunction with the project geotechnical engineer.

F. Each lift shall be compacted, tested, and approved before another lift is added. The actual quality of the fill, as compacted, shall be the responsibility of the CONTRACTOR and satisfactory results from the tests shall not be considered as a guarantee of the quality of the CONTRACTOR's filling operations.

3.5 STRUCTURE BACKFILL PLACEMENT AND COMPACTION

The backfill material shall be placed in maximum 8-inch lifts and compacted to a density ranging between 95 and 100 percent of maximum Standard Proctor (ASTM D698) dry density at a moisture content ranging from 2 percentage points below optimum to 5 percentage points above optimum for the backfill materials. Caution shall be exercised not to over compact the backfill. Hand-operated tampers or other lightweight compactors are required in the 5-foot area adjacent to the wall or other structure. Non-expansive earth fill shall be used for structure backfill. The lift thickness shall be reduced to 4 inches for those areas where hand-operated compactors are required. The backfill surface shall slope away from the structure on a gradient of 1.5 to 3 percent, such that surface water does not pond adjacent to the structure within the backfill zone. Topsoil and seeding shall be

C. Stripping shall consist of the removal of all topsoil, roots, vegetation, and rubbish not removed by the clearing and grubbing operation. Additionally, any other unsatisfactory material shall be removed from the subgrade area of future compacted fills or embankments, and from the surfaces underneath the future roadways or other structures. The stripped areas shall be observed to determine if additional excavation is required to remove weak or otherwise unsuitable materials that would adversely affect the fill placement.

D. Dispose of removed obstructions and debris off-site in accordance with local requirements.

3.2 SUBGRADE PREPARATION

A. The subgrade shall be firm and able to support the construction equipment without displacement. Soft or yielding subgrade shall be corrected and made stable before construction proceeds. The subgrade shall be proof rolled to detect soft spots, which if exist, shall be reworked. Proof rolling shall be performed using a heavy pneumatic tired roller, loaded dump truck, or similar equipment weighing approximately 25 tons. The proof rolling operations will be observed by the project geotechnical engineer. The sides of stump holes or other similar cavities or depressions shall be broken down to flatten the slopes (no steeper than 4 horizontal to 1 vertical), with the sides of the cuts or holes being scarified to provide bond between the foundation soils and the embankment fill. Each depression or hole shall be filled with the same type of material, which is to be placed immediately above the foundation soil.

B. Existing hillsides or slopes, which will receive fill, shall be loosened by scarifying or plowing to a depth of not less than 8 inches. The fill material shall be benched into the existing slope in such a manner as to provide adequate bonding between the fill and slope, as well as to allow the fill to be placed in essentially horizontal lifts.

C. Prior to placement of compacted fill in any section of the embankment, after depressions and holes have been filled, the foundation of such sections shall be compacted to the same density and moisture requirement as the embankment.

D. In areas of the subgrade, which are too soft, wet or otherwise unstable to allow embankment construction to begin, the use of plating and/or plating in combination with "GEOGRID" soil reinforcement or approved equal, may be required.

E. The traffic of heavy equipment, including heavy compaction equipment, may create pumping and general deterioration of the shallower clay soils Therefore, it shall be anticipated that some construction difficulties will be encountered during periods when these soils are saturated. The clayey, sandy, and silty soils may have to be excavated, mixed, dried, and replaced. At times, excavating and replacing with selected soils, the use of lime or cement treatment, or the use of geo-synthetic materials may be required before an adequate subgrade can be achieved.

3.3 PLACING OF MATERIAL

A. Embankment materials shall be placed on a properly prepared subgrade as recommended above. The combined excavation, placing and spreading operation shall be done in such a manner to obtain blending of material, and to provide that the materials, when compacted in the embankment, will have the most practicable degree of compaction and stability. Materials excavated from cut sections and hauled to construct fills must be mixed and not segregated. Sands and clayey sands shall be blended with sandy clays and clays, rather than having lifts of non-cohesive sandy materials.

B. If the surface of the embankment is too smooth and hard to bond properly with a succeeding layer, the surface shall be roughened and loosened by disking before the succeeding layer is placed.

C. Where fill is to be placed next to existing fill, that fill shall be removed to unweathered, dense material. Each layer shall be benched and disked as adjoining lifts are placed. Material hauling equipment shall be so routed over the embankment surface to distribute the added compaction afforded by the rolling equipment, and to prevent the formation of ruts on the embankment surface.

D. The surface of the fill shall be graded to drain freely and maintained throughout construction. During the dumping and spreading process, all roots and debris and all rocks greater than four (4) inches in maximum dimension shall be removed from the embankment materials. No rocks shall be allowed within the final 8 inches of subgrade.

SECTION 201
EARTHWORK

PART 1 - GENERAL

1.1 SCOPE OF WORK

A. The earthwork consists of operations required for excavation, non-expansive earth fill; structure backfill and general earth fill, as may be required during development of the project. The term "embankment" as used in this section refers to the compacted earth fill required for structure pads, roadway embankment fill, and miscellaneous related fill. The "subgrade" refers to the surface of the cleared and stripped areas that are designated to receive fill roadways or structures.

B. The CONTRACTOR shall inform and satisfy himself as to the character, quantity, and distribution of material to be excavated.

C. In the event of a conflict between this specification and project plans (drawings) then the plans will take precedence.

1.2 WORK AFFECTING EXISTING UTILITIES

Above or below grade utilities, which are to remain, shall be protected by the CONTRACTOR. Existing utilities shall not be taken out of service without specific written authorization by the OWNER.

1.3 PROTECTION

A. Protect trees, shrubs, lawns, and other features remaining as part of the final landscaping.

B. Protect benchmarks, existing structures (not being removed), fences, roads, and paving.

C. Notify the ENGINEER of unexpected subsurface conditions.

D. Where damage could result from continuing work, discontinue work in area until ENGINEER notifies CONTRACTOR of the required modifications.

PART 2 - PRODUCTS

2.1 EQUIPMENT

A. CONTRACTOR shall furnish, operate and maintain all equipment required to complete this project, including, but not limited to, the following:

B. Grading Equipment: Equipment necessary to produce uniform layers, sections, and smoothness of grade for compaction and drainage.

C. Miscellaneous Equipment: Scarifies, disks, spring tooth or spike tooth harrows, earth hauling equipment and other equipment suitable for removal of material from excavations and for the construction of fills.

2.2 TOPSOIL

Source: Topsoil shall be obtained from excavation and fill areas. Strip and stockpile the top six (6) inches of material from such areas.

PART 3 - EXECUTION

3.1 CLEARING, GRUBBING AND STRIPPING

A. All areas to be excavated or to receive earth fill, roadways, structures, or other such facilities, shall be cleared, grubbed, and stripped prior to excavation and subgrade preparation.

B. Clearing and grubbing shall consist of the removal of all trees, large vegetation, abandoned structures, and debris, including all roots I inch or larger in diameter, to a minimum depth of eighteen (18) inches below the proposed subgrade level. For areas to be planted or sodded and surfaced to a depth of a (24") twenty-four inches below finished grade in areas to be covered by a building or structure.

(This page is intentionally left blank)

SPECIFICATIONS

Trade Names:

Except as specified otherwise, whenever in the plans or specifications an article or class of material is designated by a trade name, or by the name or catalogue number of any maker, patentee, manufacturer, or dealer, such designation shall be taken to mean and specify the articles described or another equal thereto in quality, finish, and serviceability, for the purpose intended.

Traffic Control:

The Contractor will be required to plan and execute the construction work in such a manner that the residents in the area of the improvement will have access to their property with a minimum of interruption. The Contractor shall maintain all traffic lanes and/or detours to the satisfaction of the Engineer.

Water and Utilities for Construction:

The Contractor shall make his own arrangements for water and other utilities necessary for the construction. Securement of water and utilities for use in this project shall respect all rights of ownership, rights of way, and all laws, rules and regulations, which may be applicable to such securement.

deficient to the degree that the reviewer cannot correct the submittal with a reasonable degree of effort, has not made a thorough review of the submittal, and that the submittal needs revision and is to be corrected and resubmitted.

Subsidiary Items:

Subsidiary items including, but not limited to grading, backfill, blocking, testing, and cleanup, which are not pay items in the proposal shall be considered subsidiary to the job and no extra pay shall be allowed.

Substitutions:

In these specifications are specified certain equipment and/or materials deemed most suitable for the service anticipated. This is not done, however, to eliminate others equally as good and efficient. The Contractor shall prepare his bid on the basis of the particular equipment and/or materials specified for the purpose of determining the low bid. The awarding of the contract shall constitute a contractual obligation to furnish the specified equipment and/or materials unless the Contractor desires to follow the following procedure:

After the execution of the contract, substitution of equipment and/or materials of makes other than those named in the contract will be considered for one reason only; that the equipment and/or materials proposed for substitution is superior or equal in construction quality and/or efficiency to that named in the contract.

In the event the Contractor obtains the Engineer's approval on equipment other than that for which the plant was originally laid out, the contractor shall, at his own expense, make any changes in the structures, piping, or electrical equipment necessary to accommodate the equipment.

To receive consideration on any alternate, full descriptive material must be submitted to the Engineer at least seven (7) days before the scheduled letting to allow sufficient item for issuance of addenda.

Taxes:

The Contractor shall be held to have studied all tax laws for the jurisdiction in which the work is being done, and shall pay all the taxes for which he may be held liable as a consumer or user of goods, or otherwise, without addition to the Contract price.

Testing:

Testing and inspection of materials required by these specifications shall be performed by a commercial testing laboratory selected by the **Owner**. Except as otherwise noted, the cost of laboratory tests will be paid by the **Contractor**. The Contractor shall pay the cost of all tests where the tested material fails and the cost of re-testing the material. This payment will be made direct to the testing laboratory by the Contractor. The Contractor shall furnish, at his own expense, all materials or specimens for testing.

Tests of the performance of equipment and constructed works such as leakage tests, bacteriological tests, deflection tests, tests of electrical circuitry, pumping tests, equipment tests, etc., shall be performed as required by these specifications at the expense of the Contractor.

Tie-in:

The cost for making the tie-in with associated appurtenances to the new water main shall be included in the price bid for the project unless otherwise noted on the plans. Note: Cost of tie-in also will include removal of any blocking required by the water line.

Time of Completion:

The time of completion for the project is stipulated by Contract Agreement. Time commences to run on a date specified by a "Notice to Proceed". "Substantial Completion" shall be interpreted according to the General Conditions and the project will be considered completed and ready for final payment upon final completion of all work including correction of all deficiencies identified by Engineer and final cleanup of all work areas.

Topsoil:

In all agricultural areas, whether grazing or crop land, and in all landscaped areas, topsoil shall be stripped to a depth of 12" for the total width of the excavation. Topsoil that is stripped shall be stockpiled near the project site in a manner that will preserve the character and quantity of the material. After the work is completed, the topsoil shall be replaced and dressed to a uniform finish.

relevant data required for review.

d. The Contractor shall stamp, initial or sign the submittal, certifying:

   i. Dimensional compatibility of the product with the space in which it is intended to be used.

   ii. Review of submittals for compliance with Contract requirements.

e. Do not start work for that requires approval by the Engineer until submittals have been returned to the Contractor with official indication that approval has been granted by the Engineer.

f. If the submittal is designated to be sent to the Engineer for information, approval by the designated approval authority shall take place before submission to the Engineer.

g. Approval of drawings and associated calculations by the Engineer shall not relieve the Contractor from the responsibility for errors or omissions in the drawings and associated calculations, or from deviations from the Contract Documents, unless submittals containing such deviations were submitted to the Engineer and the deviations were specifically called to the attention of the Engineer in the letter of transmittal and within the submittal, and approved specifically by the Engineer as a Contract change.

h. Approval of the Contractor's submittal by the Engineer shall not relieve the Contractor of any responsibility, including responsibility for accuracy and agreement of dimensions and details.

2. Distribution of Submittals after Review: Distribute prints or copies of approved submittals, bearing the Engineer's or designated approval authority's stamp and signature, to the Contractor's field office; to affected and concerned Subcontractors, Suppliers, and fabricators; and to affected and concerned members of the Contractor's workforce.

E. Engineer's Review

1. Submittals will be reviewed for conformance with requirements of the Contract Documents. Review of a separate item will not constitute review of an assembly in which the item functions. Review will not relieve the Contractor from Contractor's responsibility for accuracy of submittals, for conformity of submittals to requirements of Contract Documents, for compatibility of described product with other provided products and the rest of the system, or for prosecution and completion of the Contract in accordance with the Contract Documents.

2. The Engineer will indicate its reviews of submittals and the action taken (approvals and nonapprovals) by means of its review stamp. The review stamp/label will be affixed by the Engineer, the action block will be marked, and the stamp/label will be signed and dated.

3. The review-stamp/label action-black marks will have the following meanings:

   a. The mark APPROVED is an acceptance, and means that the submittal appears to conform to the respective requirements of the Contract Documents; that fabrication, assembly, manufacture, installation, application, and erection of the illustrated and described product may proceed; and that the submittal need not be resubmitted.

   b. The mark APPROVED AS CORRECTED is an acceptance, and means that the submittal appears to conform to the respective requirements of the Contract Documents upon incorporation of the reviewer's corrections, and that fabrication, assembly, manufacture, installation, application, and erection of the illustrated and described product may proceed. Submittals so marked need not be resubmitted unless the Contractor challenges the reviewer's exception.

   c. The mark NOT APPROVED is a disapproval, and means that the submittals is

costs in connection with the work specified herein will be considered to be included with the item of work in the bid Schedule of the Bid Form, or incidental to the Work.

B. List of Materials Sources
The Contractor shall submit to the Engineer a list of the Contractor's sources of materials. The list shall be submitted in sufficient time to permit proper inspections and testing of materials to be furnished from such listed sources in advance of their use.

C. Submittal Requirements

1. Professional Seal Required: Submittals involving engineering design services when specified or required by governing codes and regulations shall be sealed and signed by a professional engineer, currently registered in the State of Texas for the discipline involved.
2. Review Period
   a. Prepare submittals sufficiently in advance so that approval may be given before commencement of related work.
   b. Allow 30 calendar days after receipt by the Engineer for review of each submittal, including resubmittals.
3. Submittal Delivery: Ship submittals prepaid or deliver by hand directly to the Engineer.
4. Changes in Approved Submittals: Changes in approved submittals will not be allowed unless those approved submittals with changes have been resubmitted and approved, in the same manner as the original submittal.
5. Supplemental Submittals: Supplemental submittals initiated by the Contractor for consideration of corrective procedures shall contain sufficient data for review. Make supplemental submittals in the same manner as initial submittals.

D. Contractor's Responsibilities

1. Contractor's Review and Approval:
   a. Each submittal shall be reviewed, stamped, and signed as reviewed and approved by the Contractor prior to submission. The Contractor's approval shall indicate review and approval with respect to the following responsibilities:
   b. The Contractor shall be responsible for:
      i. The correctness of the drawings, for shop fits and field connections, and for the results obtained by the use of such drawings.
      ii. Verification of catalog numbers, and similar data.
      iii. Determination and verification of field measurements and field construction criteria.
      iv. Checking and coordinating information in the submittal with requirements of the Work and of the Contract Documents.
      v. Determination of accuracy and completeness of dimensions and quantities.
      vi. Confirmation and coordination of dimensions and field conditions at the site.
      vii. Safety precautions.
      viii. Errors or omissions on submittals.
      ix. Coordination and performance of work of all trades.
      x. Identification of deviation(s) from Contract requirements.
   c. The Contractor shall coordinate each submittal with the requirements of the Work, placing particular emphasis upon assuring that each submittal of one trade is compatible with other submittals of related work. Ensure submittal is complete with all

Sanitary Facilities:

Contractor shall provide sanitary facilities at or near the site for the duration of the regular work. The Contractor shall establish and enforce among his employees acceptable sanitary regulation. All sanitary facilities will be subject to the approval of the Engineer or local health authority.

Scope of Work:

This project shall be identified in the Plans and Specifications. In the event of a conflict between this specification and project plans (drawings) then the plans will take precedence.

Shop Drawings:

The Contractor shall furnish drawings, schematics, data, etc., on materials and equipment for approval by the Engineers prior to purchase, fabrication or shipment. Sufficient sets shall be furnished to provide four (4) sets for the Engineer, one (1) set for the Owner and one (1) set for approval for a total of six (6) sets. Additional sets shall be furnished as required by the Contractor.

Site Investigation:

The information contained in these Contract Documents in regard to original topography, subsurface soils, subsurface structures, subsurface utilities, and any quantities based thereon, is furnished solely for the convenience of the Contractor. The completeness and accuracy of this information is not guaranteed and its use in no way relieves the Contractor or others of any responsibility for loss due to inaccuracies or deviations there from which may be encountered.

For the purposes of this project, it is stipulated, and Contractor agrees to stipulate, that Contractor shall discover and shall be aware of all water utility facilities, all sanitary sewer facilities, all storm sewer facilities, all gas utility facilities, all telephone utility facilities, all electric utility facilities, and all other subsurface pipelines and utilities that may impede Contractor's work whether shown or indicated or not shown or not indicated by these Contract Documents, that the Contractor has considered the presence of such utilities in preparing his bid and negotiating the contract amount, and that the discovery of such utilities shall not be cause for additional compensation to the Contractor.

Specifications:

Titles to divisions and paragraphs in these Contract Documents are introduced for convenience and are not to be taken as a correct or complete segregation of the several units of material and labor. No responsibility, either direct or implied, is assumed by the Engineer for omissions or duplications by the Contractor or his subcontractors, due to real or alleged error in arrangement of matter in these Contract Documents.

Spoil:

All excavated material unfit for backfill, waste material accumulated on the job, and any material surplus to that needed in the prosecution of the work shall be removed from the site by the Contractor and disposed of at his expense. Upon specific approval by the Owner, any or all of the material may be disposed of on site in an approved manner.

Submittals:

Submittals required of the Contractor or successful Bidder by the Contract Documents are listed as follows:

Executed Contract and Bonds
Certificates of Insurance
Materials Submittals
Shop Drawings
Proposals for Alternatives
Application for Progress Payment
Notice of Substantial Completion
Notice of Final Completion
Application for Final Payment
Contractor's Certification and Guarantee
Consent of Surety

A. Measurement and Payment

Separate measurement or payment will not be made for work required under this Section. All

during the work. If the work shall require that any property line or property corner markers or monuments be disturbed then the Contractor shall provide licensed surveyors to reference the marker(s) or monuments(s) and reset them following completion of the work.

Protection of Existing Utilities and Improvements:

The Contractor shall take adequate measures to protect all existing structures, improvements and utilities which may be encountered.

The utility lines and conduits shown on the plans are for information only and are not guaranteed by the Owner or the Engineer to be accurate as to location and depth. They are shown on the plans as the best information available from the owners of the utilities involved and from evidences found on the ground.

The Contractor shall determine the exact location of all existing utilities and conduct his work so as to prevent interruption of service or damage to them. The Contractor shall be responsible for the replacement of any utility damaged by him and shall likewise be responsible for losses to the utility owner due to any disruption to the service of the utility caused by the Contractor.

All work necessary for the relocation or adjustment of any existing utilities will be the responsibility of the Owner of the particular utility involved except where indicated in the plans and specifications of this contract and such work is not a part of this contract.

Protection of Trees, Plants, and Shrubs:

The Contractor shall exercise all reasonable precautions to protect trees, plants, and shrubs during construction of this project. The Owner may require the contractor to replace to the satisfaction of the Engineer any trees, plants, or shrubs which in the judgment of the Engineer were unjustifiably damaged. Trees, plants, and shrubs in landscaped areas shall be restored to their original condition. Lawns shall be re-sodded.

Requirements for Road Crossings:

The Contractor shall conform to all requirements of the Owner, State Department of Highways and Public Transportation and railroad companies pertaining to the road crossings in this project, including licensing, insurance, construction procedures, and such other items as may be specified. No extra charge to the Owner for conformance to City, Department, and railroad company requirements will be allowed.

Rights-of-way and Easements:

The Owner will furnish the necessary rights-of-way and easements for the permanent project. Unless otherwise specified or set forth in the Contract Documents, the site is to be ready for occupancy by the Contractor upon signing of the Contract.

Safety Restrictions - Work near High Voltage Lines:

The following procedures will be followed regarding the subject item on this contract:

A. A warning sign not less than five inches by seven inches, painted yellow with black letters that are legible at twelve feet, shall be laced inside and outside vehicles such as cranes, derricks, power shovels, drilling rigs, pile drivers, hoisting equipment or similar apparatus. The warning sign shall read as follows: "Warning - Unlawful to Operate this Equipment within Six Feet of High Voltage Lines."

B. Equipment that may be operated within ten feet of high voltage lines shall have an insulating cage type of guard about the boom or arm, except backhoes or dippers, and insulator lines on the lift hook connections.

C. When necessary to work within six feet of high voltage electric lines, notify the power company, who will erect temporary mechanical barrier, de-energize the line, or raise or lower the line. The work done by the power company shall not be at the expense of the Owner. The notifying department shall maintain an accurate log of all such calls to the power company and shall record action taken in each case.

D. If the Contractor is required to make arrangements with the power company for the temporary relocation or raising of high voltage lines, that relocation will be at the Contractor's sole cost and expense.

E. No person shall work within six feet of a high voltage line without protection having been taken as outlined in Paragraph C.

Intent of Plans and Specifications:

The intent of the plans and specifications is to prescribe a complete work which the Contractor understands to do in full compliance with the Contract Documents. The Contractor shall do all work as provided by the Contract Documents and shall do such additional work as may be necessary to complete the work in a satisfactory and acceptable manner. The Contractor shall furnish all labor, tools, materials, machinery, equipment, and incidentals necessary to the satisfactory prosecution and completion of the work. The prices bid in the proposal shall be full compensation for all material, labor, equipment, and incidental items required to complete the project according to the Contract Documents ready for use. Items of work specified by the plans and/or specifications, but not identified by the Bid Proposal, shall be accomplished according to the plans and/or specifications and there shall be no separate payment for such items of work.

"Kickback" Prohibition:

The Contractor shall comply with the Copeland "Anti Kickback" Act (18 U.S.C.874) as supplemented in The Department of Labor regulations (29 CFR Part 3).

Lines and Grades:

Lines and grades for construction shall be established by the Engineer for this project.

Materials and Workmanship:

No materials which have been used by the Contractor for any temporary purpose whatever are to be incorporated in the permanent structure. All materials to be used shall be new. All materials and workmanship shall be first-class according to the standards of the trade. Unless otherwise specified, all materials shall be the best of their respective kinds and shall be in all cases fully equal to samples conforming to the specifications.

Minimum Wage Rates:

Wage rates for the workmen engaged on the project shall not be less than the minimum amounts specified by applicable local, state, or federal statues.

Owner:

The word **"Owner"** shall be identified on the Notice to Bidders

Payment for Work:

The contractor shall submit monthly invoices to the Engineer for work completed and/or materials stored during the previous month. Upon verification and approval, the Engineer shall submit the pay request to the Owner for consideration and payment. A five percent (5%) retainage will be withheld from all pay estimates until completion of the project.

Permits:

Permits and licenses of a temporary nature necessary for completion of the work shall be secured and paid for by the Contractor. Permits, licenses and easements for permanent changes shall be secured and paid for by the Owner, unless otherwise specified.

Prevention of Accident:

The Contractor shall at all times during the course of construction of this project exercise such precautions as are necessary for the prevention of accidents. The safety provisions, as outlined in the "Manual of Accident Prevention in Construction," published by the Associated General Contractors of America, shall be observed to such extent that such provisions do not conflict with existing Federal, State and City laws.

Project Conferences:

The following meetings and conferences shall be conducted and shall be attended by the Contractor:

Pre-construction Conference
Substantial Completion Inspection
Pre-final Inspection
Final Inspection

Property Corners and Monuments:

Contractor shall protect all property line and property corner markers and monuments encountered

Farmersville, Texas 75442
972-784-7777

Fences and Fence Gaps:

The Contractor shall construct and maintain fence and fence gaps required to control livestock during the construction of this project. Fence gaps shall be constructed so that they will be equal to or better than the fence in which they are built. It shall be the Contractor's responsibility to prevent unauthorized persons from using the fence gaps constructed by him. When requested to do so by the property owner, the Contractor shall maintain locks on the fence gaps. Prior to building the fence gaps the Contractor shall brace the fence on both sides of the gap to be cut in a manner to prevent the adjoining fence from becoming slack or sagging. After final cleanup has been completed, the contractor shall remove fence gaps he built and rebuild the fence to its original condition or better.

Guarantee:

The Contractor shall deliver to the Engineer upon completion of all work under the Contract his written guarantee, made out to the Owner and in a form satisfactory to the Engineer, guaranteeing (and he does hereby guarantee) all the work under the Contract to be free from faulty materials in every particular and free from improper workmanship, and against injury from proper and usual wear, and agreeing (and he does hereby agree) to replace or to re-execute without cost to the Owner such work as may be found to be improper or imperfect, and to make good all damage caused to the other work or materials, due to such required replacement or re-execution. This guarantee shall be made to cover (and does cover) a period of two (2) years from the date of completion of all work under the Contract as evidenced by the Engineer's final certificate, or for a longer period where so stipulated in the Contract Documents.

This guarantee (in the form of a maintenance bond) must be furnished to the Engineer and approved by him before acceptance and final payment is made.

Neither the final certificate, nor payment, nor any provision in the Contract Documents shall relieve the Contractor of responsibility for neglect or faulty materials or workmanship during the period covered by the guarantee.

An inspection shall be performed by the **Owner** at 1-year and prior to the expiration of the guarantee and warranty period of 2-years to identify any warranty work to be provided by the **Contractor** for the project.

Inconvenience to the Public:

It is the declared and acknowledged intent of these specifications that all work and cleanup or other such operations shall be conducted in such manner that the public is not unnecessarily inconvenienced nor a hazard to public safety created.

Inspection:

The Contractor shall at all times provide adequate access to the **Owner** and Engineer for inspection of all improvements. Work will be subject to final inspection by the Engineer after completion, and this inspection shall take precedence over all other inspections. The Contractor shall inspect his materials and works in progress and assure conformance to the plans and specifications.

Inspector Duties:

The resident inspector will provide periodic on-site inspection of the construction projects. The inspections will be in addition to the general engineering oversight provided by the Engineer. Duties of the resident inspector will include general oversight and monitoring of the projects to insure general conformance with the plans and specifications. The inspector will record project status, construction delays, weather conditions, contractor personnel and equipment on-site for each project. The information gathered will be recorded on an inspection report. The resident inspector will be a resource for the Engineer and Owner to help identify potential construction related problems and evaluate potential change orders. The resident inspector's undertaking hereunder shall not relieve the contractor of contractor's obligation to perform the work in conformity with the drawings and specifications and in a workmanlike manner; shall not make the Resident Inspector or the Engineer an insurer of the contractor's performance; and shall not impose upon the Resident Inspector or the Engineer any obligation to see that the work is performed in a safe manner.

As-Built Information:

The Contractor will be responsible for recording and providing to the Owner and Engineer all information concerning changes from the original Plans as to water line location for transfer to the "As-Built" Plans.

Barricades, Warning and Detour Signs:

Street and highway closures and traffic control shall be accomplished according to the instructions of the City Street Department and the Texas Department of Highways and Public Transportation, as applicable. When any street or high way is closed or traffic flow is restricted, the Contractor shall furnish and maintain adequate barricades, warning and directing signs, lights, and red flags at each end of the street and at all intersections along the street within the limits of the work. All lights shall be kept burning between sunset and sunrise.

Clean Up:

The Contractor shall at all times keep the site and structures or facilities thereon, free from accumulation of waste material, debris, or rubbish caused by his employees or work. At the completion of the work, he shall remove from the site all his tools, surplus materials, debris, and shall leave the site and his work "broom clean," or its equivalent, unless otherwise noted on the drawings or specified herein. Final acceptance of the complete project work shall be given by the **Owner**.

Contractor's Use of Premises:

The Contractor shall restrict his operations and employees to the designated rights-of-way, routes, and areas of construction.

Coordination of Work:

The Contractor shall closely coordinate all construction work with the **Owner** and/or the **Engineer**. Field changes from the Plans and Specifications will only be allowed upon approval of the **Owner** and/or the **Engineer**.

Correction of Work:

If the work completed under this contract is found to be subject to faulty materials, improper workmanship, or injury due to proper and usual wear during the period of the Contractor's guarantee, then the Contractor shall replace, correct, or re-execute such work within five (5) days of receipt by him of notice from the Owner that unacceptable materials, workmanship, or injury has been discovered. If the Contractor fails to repair such defects in the work, the Owner may make the necessary repairs and charge the Contractor the cost thereby incurred.

Cutting, Patching, and Fitting:

The Contractor shall perform all cutting, patching, or fitting of his work that may be required to make its several parts come together properly and fit it to existing facilities or the work of others as shown or reasonably implied by the drawings and/or specifications for the completed project.

Damage to Public or Private Property:

Any damage to sidewalks, street pavements, curb and gutter, driveways, drainage structures, street signs, or other public or private property caused by the Contractor's operations shall be repaired at the Contractor's expense, unless otherwise provided.

Deductions from Wages:

The Contractor shall deduct from all workmen's wages Social Security, Withholding Tax, and other deductions required by law. He shall not make any deductions other than those required or authorized by law.

Disposal of Surplus Material:

Surplus material not required for other parts of the work and not otherwise specifically covered by the drawings or specifications shall become the property of the Contractor for disposal by him by a safe and legal method.

Engineer:

The word "**Engineer**" shall refer to:

Daniel & Brown Inc.
P.O. Box 606

SECTION 108
SUPPLEMENTAL GENERAL CONDITIONS

Changes in the Work:

Article 11 of the General Conditions shall be amended by the addition of the following:
The **Owner** may add or delete items of the work specified by these Contract Documents. Changes in the contract amount caused by such additions or deletions shall be computed based upon the unit prices or lump sum prices specified by the Bid Schedule for such items of work. If the **Owner** adds or deletes items of work specified by these Contract Documents, the Contractor shall not assert a claim for extra compensation based upon any item of cost, such as overhead, bonds, insurance, and other direct and indirect costs, if such items are not listed in the Bid Schedule.

Subsurface Conditions:

Article 5 of the General Conditions shall be amended by the addition of the following paragraph:
The foregoing notwithstanding, trench excavation and structural excavation shall include removal of all types of materials encountered, without exception. All excavations shall be made to the lines and grades indicated on the drawings and/or specified herein. The Contractor shall not assert a claim for extra compensation based upon the character of material excavated.

Insurance:

Applicable sections of the Standard General Conditions shall be amended by the following:
Contractor shall provide insurance coverage and limits for this project as indicated below.
(*Note: **Owner** and **Engineer** shall be named as certificate holders and NAIC number shall be shown on the certificate for each insurance company*):

A.	Workmen's Compensation	State Statutory Requirements
B.	Comprehensive General Liability	$1,000,000 each occurrence bodily injury $1,000,000 each occurrence on property damage
C.	Automobile	$500,000 Combined Single Limit
D.	Builders Risk / All Risk	Contract Price Totaled in the Bid
E.	Other	Other coverage as required or for specific provisions.

Engineer's Authority:

Article 10 of the General Conditions shall be amended to add the following clarification:
Contractor shall not assert a claim of delay or additional compensation based upon Engineer's response or lack of response to Contractor's requests for clarifications or interpretations about requirements of the Contract Documents that are clearly stated or that can reasonably be inferred.

General:

The provisions of this Section of the Supplemental General Conditions shall govern in the event of any conflicts between them and the "Standard General Conditions" or the specifications.

Abbreviations:

Whenever any of the following abbreviations appear in these Specifications, their meanings shall be as follows:

*AWWA	American Water Works Association
*ASTM	American Society for Testing Materials
AASHO	American Assn. of State Highway Officials, The Standard Specifications for Road and Bridge Construction adopted by the Texas State Department of Highways, January, 1972, with subsequent revisions
C.S.	Commercial Standards
NSF	National Sanitation Foundation
C.I.	Cast Iron
PVC	Polyvinyl Chloride
C.E.	Ductile Iron

*Latest revision

18.04 *Limitation of Damages*

A. With respect to any and all Change Proposals, Claims, disputes subject to final resolution, and other matters at issue, neither Owner nor Engineer, nor any of their officers, directors, members, partners, employees, agents, consultants, or subcontractors, shall be liable to Contractor for any claims, costs, losses, or damages sustained by Contractor on or in connection with any other project or anticipated project.

18.05 *No Waiver*

A. A party's non-enforcement of any provision shall not constitute a waiver of that provision, nor shall it affect the enforceability of that provision or of the remainder of this Contract.

18.06 *Survival of Obligations*

A. All representations, indemnifications, warranties, and guarantees made in, required by, or given in accordance with the Contract, as well as all continuing obligations indicated in the Contract, will survive final payment, completion, and acceptance of the Work or termination or completion of the Contract or termination of the services of Contractor.

18.07 *Controlling Law*

A. This Contract is to be governed by the law of the state in which the Project is located.

18.08 *Headings*

A. Article and paragraph headings are inserted for convenience only and do not constitute parts of these General Conditions.

expenses or damage directly attributable to Contractor's stopping the Work as permitted by this paragraph.

ARTICLE 17 – FINAL RESOLUTION OF DISPUTES

17.01 *Methods and Procedures*

A. *Disputes Subject to Final Resolution*: The following disputed matters are subject to final resolution under the provisions of this Article:

1. A timely appeal of an approval in part and denial in part of a Claim, or of a denial in full; and

2. Disputes between Owner and Contractor concerning the Work or obligations under the Contract Documents, and arising after final payment has been made.

B. *Final Resolution of Disputes*: For any dispute subject to resolution under this Article, Owner or Contractor may:

1. elect in writing to invoke the dispute resolution process provided for in the Supplementary Conditions; or

2. agree with the other party to submit the dispute to another dispute resolution process; or

3. if no dispute resolution process is provided for in the Supplementary Conditions or mutually agreed to, give written notice to the other party of the intent to submit the dispute to a court of competent jurisdiction.

ARTICLE 18 – MISCELLANEOUS

18.01 *Giving Notice*

A. Whenever any provision of the Contract Documents requires the giving of written notice, it will be deemed to have been validly given if:

1. delivered in person, by a commercial courier service or otherwise, to the individual or to a member of the firm or to an officer of the corporation for which it is intended; or

2. delivered at or sent by registered or certified mail, postage prepaid, to the last business address known to the sender of the notice.

18.02 *Computation of Times*

A. When any period of time is referred to in the Contract by days, it will be computed to exclude the first and include the last day of such period. If the last day of any such period falls on a Saturday or Sunday or on a day made a legal holiday by the law of the applicable jurisdiction, such day will be omitted from the computation.

18.03 *Cumulative Remedies*

A. The duties and obligations imposed by these General Conditions and the rights and remedies available hereunder to the parties hereto are in addition to, and are not to be construed in any way as a limitation of, any rights and remedies available to any or all of them which are otherwise imposed or available by Laws or Regulations, by special warranty or guarantee, or by other provisions of the Contract. The provisions of this paragraph will be as effective as if repeated specifically in the Contract Documents in connection with each particular duty, obligation, right, and remedy to which they apply.

and damages exceeds such unpaid balance, Contractor shall pay the difference to Owner. Such claims, costs, losses, and damages incurred by Owner will be reviewed by Engineer as to their reasonableness and, when so approved by Engineer, incorporated in a Change Order. When exercising any rights or remedies under this paragraph, Owner shall not be required to obtain the lowest price for the Work performed.

F. Where Contractor's services have been so terminated by Owner, the termination will not affect any rights or remedies of Owner against Contractor then existing or which may thereafter accrue, or any rights or remedies of Owner against Contractor or any surety under any payment bond or performance bond. Any retention or payment of money due Contractor by Owner will not release Contractor from liability.

G. If and to the extent that Contractor has provided a performance bond under the provisions of Paragraph 6.01.A, the provisions of that bond shall govern over any inconsistent provisions of Paragraphs 16.02.B and 16.02.D.

16.03 *Owner May Terminate For Convenience*

A. Upon seven days written notice to Contractor and Engineer, Owner may, without cause and without prejudice to any other right or remedy of Owner, terminate the Contract. In such case, Contractor shall be paid for (without duplication of any items):

1. completed and acceptable Work executed in accordance with the Contract Documents prior to the effective date of termination, including fair and reasonable sums for overhead and profit on such Work;

2. expenses sustained prior to the effective date of termination in performing services and furnishing labor, materials, or equipment as required by the Contract Documents in connection with uncompleted Work, plus fair and reasonable sums for overhead and profit on such expenses; and

3. other reasonable expenses directly attributable to termination, including costs incurred to prepare a termination for convenience cost proposal.

B. Contractor shall not be paid on account of loss of anticipated overhead, profits, or revenue, or other economic loss arising out of or resulting from such termination.

16.04 *Contractor May Stop Work or Terminate*

A. If, through no act or fault of Contractor, (1) the Work is suspended for more than 90 consecutive days by Owner or under an order of court or other public authority, or (2) Engineer fails to act on any Application for Payment within 30 days after it is submitted, or (3) Owner fails for 30 days to pay Contractor any sum finally determined to be due, then Contractor may, upon seven days written notice to Owner and Engineer, and provided Owner or Engineer do not remedy such suspension or failure within that time, terminate the contract and recover from Owner payment on the same terms as provided in Paragraph 16.03.

B. In lieu of terminating the Contract and without prejudice to any other right or remedy, if Engineer has failed to act on an Application for Payment within 30 days after it is submitted, or Owner has failed for 30 days to pay Contractor any sum finally determined to be due, Contractor may, seven days after written notice to Owner and Engineer, stop the Work until payment is made of all such amounts due Contractor, including interest thereon. The provisions of this paragraph are not intended to preclude Contractor from submitting a Change Proposal for an adjustment in Contract Price or Contract Times or otherwise for

E. Contractor's obligations under this paragraph are in addition to all other obligations and warranties. The provisions of this paragraph shall not be construed as a substitute for, or a waiver of, the provisions of any applicable statute of limitation or repose.

ARTICLE 16 – SUSPENSION OF WORK AND TERMINATION

16.01 *Owner May Suspend Work*

A. At any time and without cause, Owner may suspend the Work or any portion thereof for a period of not more than 90 consecutive days by written notice to Contractor and Engineer. Such notice will fix the date on which Work will be resumed. Contractor shall resume the Work on the date so fixed. Contractor shall be entitled to an adjustment in the Contract Price or an extension of the Contract Times, or both, directly attributable to any such suspension. Any Change Proposal seeking such adjustments shall be submitted no later than 30 days after the date fixed for resumption of Work.

16.02 *Owner May Terminate for Cause*

A. The occurrence of any one or more of the following events will constitute a default by Contractor and justify termination for cause:

1. Contractor's persistent failure to perform the Work in accordance with the Contract Documents (including, but not limited to, failure to supply sufficient skilled workers or suitable materials or equipment or failure to adhere to the Progress Schedule);

2. Failure of Contractor to perform or otherwise to comply with a material term of the Contract Documents;

3. Contractor's disregard of Laws or Regulations of any public body having jurisdiction; or

4. Contractor's repeated disregard of the authority of Owner or Engineer.

B. If one or more of the events identified in Paragraph 16.02.A occurs, then after giving Contractor (and any surety) ten days written notice that Owner is considering a declaration that Contractor is in default and termination of the contract, Owner may proceed to:

1. declare Contractor to be in default, and give Contractor (and any surety) notice that the Contract is terminated; and

2. enforce the rights available to Owner under any applicable performance bond.

C. Subject to the terms and operation of any applicable performance bond, if Owner has terminated the Contract for cause, Owner may exclude Contractor from the Site, take possession of the Work, incorporate in the Work all materials and equipment stored at the Site or for which Owner has paid Contractor but which are stored elsewhere, and complete the Work as Owner may deem expedient.

D. Owner may not proceed with termination of the Contract under Paragraph 16.02.B if Contractor within seven days of receipt of notice of intent to terminate begins to correct its failure to perform and proceeds diligently to cure such failure.

E. If Owner proceeds as provided in Paragraph 16.02.B, Contractor shall not be entitled to receive any further payment until the Work is completed. If the unpaid balance of the Contract Price exceeds the cost to complete the Work, including all related claims, costs, losses, and damages (including but not limited to all fees and charges of engineers, architects, attorneys, and other professionals) sustained by Owner, such excess will be paid to Contractor. If the cost to complete the Work including such related claims, costs, losses,

including but not limited to set-offs for liquidated damages and set-offs allowed under the provisions above with respect to progress payments) will become due and shall be paid by Owner to Contractor.

15.07 *Waiver of Claims*

A. The making of final payment will not constitute a waiver by Owner of claims or rights against Contractor. Owner expressly reserves claims and rights arising from unsettled Liens, from defective Work appearing after final inspection pursuant to Paragraph 15.05, from Contractor's failure to comply with the Contract Documents or the terms of any special guarantees specified therein, from outstanding Claims by Owner, or from Contractor's continuing obligations under the Contract Documents.

B. The acceptance of final payment by Contractor will constitute a waiver by Contractor of all claims and rights against Owner other than those pending matters that have been duly submitted or appealed under the provisions of Article 17.

15.08 *Correction Period*

A. If within one year after the date of Substantial Completion (or such longer period of time as may be prescribed by the terms of any applicable special guarantee required by the Contract Documents, or by any specific provision of the Contract Documents), any Work is found to be defective, or if the repair of any damages to the Site, adjacent areas that Contractor has arranged to use through construction easements or otherwise, and other adjacent areas used by Contractor as permitted by Laws and Regulations, is found to be defective, then Contractor shall promptly, without cost to Owner and in accordance with Owner's written instructions:

1. correct the defective repairs to the Site or such other adjacent areas;
2. correct such defective Work;
3. if the defective Work has been rejected by Owner, remove it from the Project and replace it with Work that is not defective, and
4. satisfactorily correct or repair or remove and replace any damage to other Work, to the work of others, or to other land or areas resulting therefrom.

B. If Contractor does not promptly comply with the terms of Owner's written instructions, or in an emergency where delay would cause serious risk of loss or damage, Owner may have the defective Work corrected or repaired or may have the rejected Work removed and replaced. Contractor shall pay all claims, costs, losses, and damages (including but not limited to all fees and charges of engineers, architects, attorneys, and other professionals and all court or arbitration or other dispute resolution costs) arising out of or relating to such correction or repair or such removal and replacement (including but not limited to all costs of repair or replacement of work of others).

C. In special circumstances where a particular item of equipment is placed in continuous service before Substantial Completion of all the Work, the correction period for that item may start to run from an earlier date if so provided in the Specifications.

D. Where defective Work (and damage to other Work resulting therefrom) has been corrected or removed and replaced under this paragraph, the correction period hereunder with respect to such Work will be extended for an additional period of one year after such correction or removal and replacement has been satisfactorily completed.

inspection, annotated record documents (as provided in Paragraph 7.11), and other documents, Contractor may make application for final payment.

2. The final Application for Payment shall be accompanied (except as previously delivered) by:

   a. all documentation called for in the Contract Documents;

   b. consent of the surety, if any, to final payment;

   c. satisfactory evidence that all title issues have been resolved such that title to all Work, materials, and equipment has passed to Owner free and clear of any Liens or other title defects, or will so pass upon final payment.

   d. a list of all disputes that Contractor believes are unsettled; and

   e. complete and legally effective releases or waivers (satisfactory to Owner) of all Lien rights arising out of the Work, and of Liens filed in connection with the Work.

3. In lieu of the releases or waivers of Liens specified in Paragraph 15.06.A.2 and as approved by Owner, Contractor may furnish receipts or releases in full and an affidavit of Contractor that: (a) the releases and receipts include all labor, services, material, and equipment for which a Lien could be filed; and (b) all payrolls, material and equipment bills, and other indebtedness connected with the Work for which Owner might in any way be responsible, or which might in any way result in liens or other burdens on Owner's property, have been paid or otherwise satisfied. If any Subcontractor or Supplier fails to furnish such a release or receipt in full, Contractor may furnish a bond or other collateral satisfactory to Owner to indemnify Owner against any Lien, or Owner at its option may issue joint checks payable to Contractor and specified Subcontractors and Suppliers.

B. *Engineer's Review of Application and Acceptance*:

1. If, on the basis of Engineer's observation of the Work during construction and final inspection, and Engineer's review of the final Application for Payment and accompanying documentation as required by the Contract Documents, Engineer is satisfied that the Work has been completed and Contractor's other obligations under the Contract have been fulfilled, Engineer will, within ten days after receipt of the final Application for Payment, indicate in writing Engineer's recommendation of final payment and present the Application for Payment to Owner for payment. Such recommendation shall account for any set-offs against payment that are necessary in Engineer's opinion to protect Owner from loss for the reasons stated above with respect to progress payments. At the same time Engineer will also give written notice to Owner and Contractor that the Work is acceptable, subject to the provisions of Paragraph 15.07. Otherwise, Engineer will return the Application for Payment to Contractor, indicating in writing the reasons for refusing to recommend final payment, in which case Contractor shall make the necessary corrections and resubmit the Application for Payment.

C. *Completion of Work*: The Work is complete (subject to surviving obligations) when it is ready for final payment as established by the Engineer's written recommendation of final payment.

D. *Payment Becomes Due*: Thirty days after the presentation to Owner of the final Application for Payment and accompanying documentation, the amount recommended by Engineer (less any further sum Owner is entitled to set off against Engineer's recommendation,

E. After Substantial Completion the Contractor shall promptly begin work on the punch list of items to be completed or corrected prior to final payment. In appropriate cases Contractor may submit monthly Applications for Payment for completed punch list items, following the progress payment procedures set forth above.

F. Owner shall have the right to exclude Contractor from the Site after the date of Substantial Completion subject to allowing Contractor reasonable access to remove its property and complete or correct items on the punch list.

15.04 *Partial Use or Occupancy*

A. Prior to Substantial Completion of all the Work, Owner may use or occupy any substantially completed part of the Work which has specifically been identified in the Contract Documents, or which Owner, Engineer, and Contractor agree constitutes a separately functioning and usable part of the Work that can be used by Owner for its intended purpose without significant interference with Contractor's performance of the remainder of the Work, subject to the following conditions:

1. At any time Owner may request in writing that Contractor permit Owner to use or occupy any such part of the Work that Owner believes to be substantially complete. If and when Contractor agrees that such part of the Work is substantially complete, Contractor, Owner, and Engineer will follow the procedures of Paragraph 15.03.A through E for that part of the Work.

2. At any time Contractor may notify Owner and Engineer in writing that Contractor considers any such part of the Work substantially complete and request Engineer to issue a certificate of Substantial Completion for that part of the Work.

3. Within a reasonable time after either such request, Owner, Contractor, and Engineer shall make an inspection of that part of the Work to determine its status of completion. If Engineer does not consider that part of the Work to be substantially complete, Engineer will notify Owner and Contractor in writing giving the reasons therefor. If Engineer considers that part of the Work to be substantially complete, the provisions of Paragraph 15.03 will apply with respect to certification of Substantial Completion of that part of the Work and the division of responsibility in respect thereof and access thereto.

4. No use or occupancy or separate operation of part of the Work may occur prior to compliance with the requirements of Paragraph 6.05 regarding builder's risk or other property insurance.

15.05 *Final Inspection*

A. Upon written notice from Contractor that the entire Work or an agreed portion thereof is complete, Engineer will promptly make a final inspection with Owner and Contractor and will notify Contractor in writing of all particulars in which this inspection reveals that the Work, or agreed portion thereof, is incomplete or defective. Contractor shall immediately take such measures as are necessary to complete such Work or remedy such deficiencies.

15.06 *Final Payment*

A. *Application for Payment*:

1. After Contractor has, in the opinion of Engineer, satisfactorily completed all corrections identified during the final inspection and has delivered, in accordance with the Contract Documents, all maintenance and operating instructions, schedules, guarantees, bonds, certificates or other evidence of insurance, certificates of

remaining after deduction of the amount so withheld. Owner shall promptly pay Contractor the amount so withheld, or any adjustment thereto agreed to by Owner and Contractor, if Contractor remedies the reasons for such action. The reduction imposed shall be binding on Contractor unless it duly submits a Change Proposal contesting the reduction.

3. Upon a subsequent determination that Owner's refusal of payment was not justified, the amount wrongfully withheld shall be treated as an amount due as determined by Paragraph 15.01.C.1 and subject to interest as provided in the Agreement.

15.02 *Contractor's Warranty of Title*

A. Contractor warrants and guarantees that title to all Work, materials, and equipment furnished under the Contract will pass to Owner free and clear of (1) all Liens and other title defects, and (2) all patent, licensing, copyright, or royalty obligations, no later than seven days after the time of payment by Owner.

15.03 *Substantial Completion*

A. When Contractor considers the entire Work ready for its intended use Contractor shall notify Owner and Engineer in writing that the entire Work is substantially complete and request that Engineer issue a certificate of Substantial Completion. Contractor shall at the same time submit to Owner and Engineer an initial draft of punch list items to be completed or corrected before final payment.

B. Promptly after Contractor's notification, Owner, Contractor, and Engineer shall make an inspection of the Work to determine the status of completion. If Engineer does not consider the Work substantially complete, Engineer will notify Contractor in writing giving the reasons therefor.

C. If Engineer considers the Work substantially complete, Engineer will deliver to Owner a preliminary certificate of Substantial Completion which shall fix the date of Substantial Completion. Engineer shall attach to the certificate a punch list of items to be completed or corrected before final payment. Owner shall have seven days after receipt of the preliminary certificate during which to make written objection to Engineer as to any provisions of the certificate or attached punch list. If, after considering the objections to the provisions of the preliminary certificate, Engineer concludes that the Work is not substantially complete, Engineer will, within 14 days after submission of the preliminary certificate to Owner, notify Contractor in writing that the Work is not substantially complete, stating the reasons therefor. If Owner does not object to the provisions of the certificate, or if despite consideration of Owner's objections Engineer concludes that the Work is substantially complete, then Engineer will, within said 14 days, execute and deliver to Owner and Contractor a final certificate of Substantial Completion (with a revised punch list of items to be completed or corrected) reflecting such changes from the preliminary certificate as Engineer believes justified after consideration of any objections from Owner.

D. At the time of receipt of the preliminary certificate of Substantial Completion, Owner and Contractor will confer regarding Owner's use or occupancy of the Work following Substantial Completion, review the builder's risk insurance policy with respect to the end of the builder's risk coverage, and confirm the transition to coverage of the Work under a permanent property insurance policy held by Owner. Unless Owner and Contractor agree otherwise in writing, Owner shall bear responsibility for security, operation, protection of the Work, property insurance, maintenance, heat, and utilities upon Owner's use or occupancy of the Work.

e. Engineer has actual knowledge of the occurrence of any of the events that would constitute a default by Contractor and therefore justify termination for cause under the Contract Documents.

D. *Payment Becomes Due*:

1. Ten days after presentation of the Application for Payment to Owner with Engineer's recommendation, the amount recommended (subject to any Owner set-offs) will become due, and when due will be paid by Owner to Contractor.

E. *Reductions in Payment by Owner*:

1. In addition to any reductions in payment (set-offs) recommended by Engineer, Owner is entitled to impose a set-off against payment based on any of the following:

a. claims have been made against Owner on account of Contractor's conduct in the performance or furnishing of the Work, or Owner has incurred costs, losses, or damages on account of Contractor's conduct in the performance or furnishing of the Work, including but not limited to claims, costs, losses, or damages from workplace injuries, adjacent property damage, non-compliance with Laws and Regulations, and patent infringement;

b. Contractor has failed to take reasonable and customary measures to avoid damage, delay, disruption, and interference with other work at or adjacent to the Site;

c. Contractor has failed to provide and maintain required bonds or insurance;

d. Owner has been required to remove or remediate a Hazardous Environmental Condition for which Contractor is responsible;

e. Owner has incurred extra charges or engineering costs related to submittal reviews, evaluations of proposed substitutes, tests and inspections, or return visits to manufacturing or assembly facilities;

f. the Work is defective, requiring correction or replacement;

g. Owner has been required to correct defective Work in accordance with Paragraph 14.07, or has accepted defective Work pursuant to Paragraph 14.04;

h. the Contract Price has been reduced by Change Orders;

i. an event that would constitute a default by Contractor and therefore justify a termination for cause has occurred;

j. liquidated damages have accrued as a result of Contractor's failure to achieve Milestones, Substantial Completion, or final completion of the Work;

k. Liens have been filed in connection with the Work, except where Contractor has delivered a specific bond satisfactory to Owner to secure the satisfaction and discharge of such Liens;

l. there are other items entitling Owner to a set off against the amount recommended.

2. If Owner imposes any set-off against payment, whether based on its own knowledge or on the written recommendations of Engineer, Owner will give Contractor immediate written notice (with a copy to Engineer) stating the reasons for such action and the specific amount of the reduction, and promptly pay Contractor any amount

a. the Work has progressed to the point indicated;

b. the quality of the Work is generally in accordance with the Contract Documents (subject to an evaluation of the Work as a functioning whole prior to or upon Substantial Completion, the results of any subsequent tests called for in the Contract Documents, a final determination of quantities and classifications for Unit Price Work under Paragraph 13.03, and any other qualifications stated in the recommendation); and

c. the conditions precedent to Contractor's being entitled to such payment appear to have been fulfilled in so far as it is Engineer's responsibility to observe the Work.

3. By recommending any such payment Engineer will not thereby be deemed to have represented that:

a. inspections made to check the quality or the quantity of the Work as it has been performed have been exhaustive, extended to every aspect of the Work in progress, or involved detailed inspections of the Work beyond the responsibilities specifically assigned to Engineer in the Contract; or

b. there may not be other matters or issues between the parties that might entitle Contractor to be paid additionally by Owner or entitle Owner to withhold payment to Contractor.

4. Neither Engineer's review of Contractor's Work for the purposes of recommending payments nor Engineer's recommendation of any payment, including final payment, will impose responsibility on Engineer:

a. to supervise, direct, or control the Work, or

b. for the means, methods, techniques, sequences, or procedures of construction, or the safety precautions and programs incident thereto, or

c. for Contractor's failure to comply with Laws and Regulations applicable to Contractor's performance of the Work, or

d. to make any examination to ascertain how or for what purposes Contractor has used the money paid on account of the Contract Price, or

e. to determine that title to any of the Work, materials, or equipment has passed to Owner free and clear of any Liens.

5. Engineer may refuse to recommend the whole or any part of any payment if, in Engineer's opinion, it would be incorrect to make the representations to Owner stated in Paragraph 15.01.C.2.

6. Engineer will recommend reductions in payment (set-offs) necessary in Engineer's opinion to protect Owner from loss because:

a. the Work is defective, requiring correction or replacement;

b. the Contract Price has been reduced by Change Orders;

c. Owner has been required to correct defective Work in accordance with Paragraph 14.07, or has accepted defective Work pursuant to Paragraph 14.04;

d. Owner has been required to remove or remediate a Hazardous Environmental Condition for which Contractor is responsible; or

include but not be limited to all costs of repair, or replacement of work of others destroyed or damaged by correction, removal, or replacement of Contractor's defective Work.

D. Contractor shall not be allowed an extension of the Contract Times because of any delay in the performance of the Work attributable to the exercise by Owner of Owner's rights and remedies under this Paragraph 14.07.

ARTICLE 15 – PAYMENTS TO CONTRACTOR; SET-OFFS; COMPLETION; CORRECTION PERIOD

15.01 *Progress Payments*

A. *Basis for Progress Payments*: The Schedule of Values established as provided in Article 2 will serve as the basis for progress payments and will be incorporated into a form of Application for Payment acceptable to Engineer. Progress payments on account of Unit Price Work will be based on the number of units completed during the pay period, as determined under the provisions of Paragraph 13.03. Progress payments for cost-based Work will be based on Cost of the Work completed by Contractor during the pay period.

B. *Applications for Payments*:

1. At least 20 days before the date established in the Agreement for each progress payment (but not more often than once a month), Contractor shall submit to Engineer for review an Application for Payment filled out and signed by Contractor covering the Work completed as of the date of the Application and accompanied by such supporting documentation as is required by the Contract Documents. If payment is requested on the basis of materials and equipment not incorporated in the Work but delivered and suitably stored at the Site or at another location agreed to in writing, the Application for Payment shall also be accompanied by a bill of sale, invoice, or other documentation warranting that Owner has received the materials and equipment free and clear of all Liens, and evidence that the materials and equipment are covered by appropriate property insurance, a warehouse bond, or other arrangements to protect Owner's interest therein, all of which must be satisfactory to Owner.

2. Beginning with the second Application for Payment, each Application shall include an affidavit of Contractor stating that all previous progress payments received on account of the Work have been applied on account to discharge Contractor's legitimate obligations associated with prior Applications for Payment.

3. The amount of retainage with respect to progress payments will be as stipulated in the Agreement.

C. *Review of Applications*:

1. Engineer will, within 10 days after receipt of each Application for Payment, including each resubmittal, either indicate in writing a recommendation of payment and present the Application to Owner, or return the Application to Contractor indicating in writing Engineer's reasons for refusing to recommend payment. In the latter case, Contractor may make the necessary corrections and resubmit the Application.

2. Engineer's recommendation of any payment requested in an Application for Payment will constitute a representation by Engineer to Owner, based on Engineer's observations of the executed Work as an experienced and qualified design professional, and on Engineer's review of the Application for Payment and the accompanying data and schedules, that to the best of Engineer's knowledge, information and belief:

B. If any Work is covered contrary to the written request of Engineer, then Contractor shall, if requested by Engineer, uncover such Work for Engineer's observation, and then replace the covering, all at Contractor's expense.

C. If Engineer considers it necessary or advisable that covered Work be observed by Engineer or inspected or tested by others, then Contractor, at Engineer's request, shall uncover, expose, or otherwise make available for observation, inspection, or testing as Engineer may require, that portion of the Work in question, and provide all necessary labor, material, and equipment.

1. If it is found that the uncovered Work is defective, Contractor shall be responsible for all claims, costs, losses, and damages arising out of or relating to such uncovering, exposure, observation, inspection, and testing, and of satisfactory replacement or reconstruction (including but not limited to all costs of repair or replacement of work of others); and pending Contractor's full discharge of this responsibility the Owner shall be entitled to impose a reasonable set-off against payments due under Article 15.

2. If the uncovered Work is not found to be defective, Contractor shall be allowed an increase in the Contract Price or an extension of the Contract Times, or both, directly attributable to such uncovering, exposure, observation, inspection, testing, replacement, and reconstruction. If the parties are unable to agree as to the amount or extent thereof, then Contractor may submit a Change Proposal within 30 days of the determination that the Work is not defective.

14.06 *Owner May Stop the Work*

A. If the Work is defective, or Contractor fails to supply sufficient skilled workers or suitable materials or equipment, or fails to perform the Work in such a way that the completed Work will conform to the Contract Documents, then Owner may order Contractor to stop the Work, or any portion thereof, until the cause for such order has been eliminated; however, this right of Owner to stop the Work shall not give rise to any duty on the part of Owner to exercise this right for the benefit of Contractor, any Subcontractor, any Supplier, any other individual or entity, or any surety for, or employee or agent of any of them.

14.07 *Owner May Correct Defective Work*

A. If Contractor fails within a reasonable time after written notice from Engineer to correct defective Work, or to remove and replace rejected Work as required by Engineer, or if Contractor fails to perform the Work in accordance with the Contract Documents, or if Contractor fails to comply with any other provision of the Contract Documents, then Owner may, after seven days written notice to Contractor, correct or remedy any such deficiency.

B. In exercising the rights and remedies under this Paragraph 14.07, Owner shall proceed expeditiously. In connection with such corrective or remedial action, Owner may exclude Contractor from all or part of the Site, take possession of all or part of the Work and suspend Contractor's services related thereto, and incorporate in the Work all materials and equipment stored at the Site or for which Owner has paid Contractor but which are stored elsewhere. Contractor shall allow Owner, Owner's representatives, agents and employees, Owner's other contractors, and Engineer and Engineer's consultants access to the Site to enable Owner to exercise the rights and remedies under this paragraph.

C. All claims, costs, losses, and damages incurred or sustained by Owner in exercising the rights and remedies under this Paragraph 14.07 will be charged against Contractor as set-offs against payments due under Article 15. Such claims, costs, losses and damages will

cover the same and Engineer had not acted with reasonable promptness in response to such notice.

14.03 *Defective Work*

A. *Contractor's Obligation*: It is Contractor's obligation to assure that the Work is not defective.

B. *Engineer's Authority*: Engineer has the authority to determine whether Work is defective, and to reject defective Work.

C. *Notice of Defects*: Prompt notice of all defective Work of which Owner or Engineer has actual knowledge will be given to Contractor.

D. *Correction, or Removal and Replacement*: Promptly after receipt of written notice of defective Work, Contractor shall correct all such defective Work, whether or not fabricated, installed, or completed, or, if Engineer has rejected the defective Work, remove it from the Project and replace it with Work that is not defective.

E. *Preservation of Warranties*: When correcting defective Work, Contractor shall take no action that would void or otherwise impair Owner's special warranty and guarantee, if any, on said Work.

F. *Costs and Damages*: In addition to its correction, removal, and replacement obligations with respect to defective Work, Contractor shall pay all claims, costs, losses, and damages arising out of or relating to defective Work, including but not limited to the cost of the inspection, testing, correction, removal, replacement, or reconstruction of such defective Work, fines levied against Owner by governmental authorities because the Work is defective, and the costs of repair or replacement of work of others resulting from defective Work. Prior to final payment, if Owner and Contractor are unable to agree as to the measure of such claims, costs, losses, and damages resulting from defective Work, then Owner may impose a reasonable set-off against payments due under Article 15.

14.04 *Acceptance of Defective Work*

A. If, instead of requiring correction or removal and replacement of defective Work, Owner prefers to accept it, Owner may do so (subject, if such acceptance occurs prior to final payment, to Engineer's confirmation that such acceptance is in general accord with the design intent and applicable engineering principles, and will not endanger public safety). Contractor shall pay all claims, costs, losses, and damages attributable to Owner's evaluation of and determination to accept such defective Work (such costs to be approved by Engineer as to reasonableness), and for the diminished value of the Work to the extent not otherwise paid by Contractor. If any such acceptance occurs prior to final payment, the necessary revisions in the Contract Documents with respect to the Work shall be incorporated in a Change Order. If the parties are unable to agree as to the decrease in the Contract Price, reflecting the diminished value of Work so accepted, then Owner may impose a reasonable set-off against payments due under Article 15. If the acceptance of defective Work occurs after final payment, Contractor shall pay an appropriate amount to Owner.

14.05 *Uncovering Work*

A. Engineer has the authority to require additional inspection or testing of the Work, whether or not the Work is fabricated, installed, or completed.

ARTICLE 14 – TESTS AND INSPECTIONS; CORRECTION, REMOVAL OR ACCEPTANCE OF DEFECTIVE WORK

14.01 *Access to Work*

A. Owner, Engineer, their consultants and other representatives and personnel of Owner, independent testing laboratories, and authorities having jurisdiction will have access to the Site and the Work at reasonable times for their observation, inspection, and testing. Contractor shall provide them proper and safe conditions for such access and advise them of Contractor's safety procedures and programs so that they may comply therewith as applicable.

14.02 *Tests, Inspections, and Approvals*

A. Contractor shall give Engineer timely notice of readiness of the Work (or specific parts thereof) for all required inspections and tests, and shall cooperate with inspection and testing personnel to facilitate required inspections and tests.

B. Owner shall retain and pay for the services of an independent inspector, testing laboratory, or other qualified individual or entity to perform all inspections and tests expressly required by the Contract Documents to be furnished and paid for by Owner, except that costs incurred in connection with tests or inspections of covered Work shall be governed by the provisions of Paragraph 14.05.

C. If Laws or Regulations of any public body having jurisdiction require any Work (or part thereof) specifically to be inspected, tested, or approved by an employee or other representative of such public body, Contractor shall assume full responsibility for arranging and obtaining such inspections, tests, or approvals, pay all costs in connection therewith, and furnish Engineer the required certificates of inspection or approval.

D. Contractor shall be responsible for arranging, obtaining, and paying for all inspections and tests required:

1. by the Contract Documents, unless the Contract Documents expressly allocate responsibility for a specific inspection or test to Owner;

2. to attain Owner's and Engineer's acceptance of materials or equipment to be incorporated in the Work;

3. by manufacturers of equipment furnished under the Contract Documents;

4. for testing, adjusting, and balancing of mechanical, electrical, and other equipment to be incorporated into the Work; and

5. for acceptance of materials, mix designs, or equipment submitted for approval prior to Contractor's purchase thereof for incorporation in the Work.

Such inspections and tests shall be performed by independent inspectors, testing laboratories, or other qualified individuals or entities acceptable to Owner and Engineer.

E. If the Contract Documents require the Work (or part thereof) to be approved by Owner, Engineer, or another designated individual or entity, then Contractor shall assume full responsibility for arranging and obtaining such approvals.

F. If any Work (or the work of others) that is to be inspected, tested, or approved is covered by Contractor without written concurrence of Engineer, Contractor shall, if requested by Engineer, uncover such Work for observation. Such uncovering shall be at Contractor's expense unless Contractor had given Engineer timely notice of Contractor's intention to

B. *Cash Allowances*: Contractor agrees that:

1. the cash allowances include the cost to Contractor (less any applicable trade discounts) of materials and equipment required by the allowances to be delivered at the Site, and all applicable taxes; and

2. Contractor's costs for unloading and handling on the Site, labor, installation, overhead, profit, and other expenses contemplated for the cash allowances have been included in the Contract Price and not in the allowances, and no demand for additional payment on account of any of the foregoing will be valid.

C. *Contingency Allowance*: Contractor agrees that a contingency allowance, if any, is for the sole use of Owner to cover unanticipated costs.

D. Prior to final payment, an appropriate Change Order will be issued as recommended by Engineer to reflect actual amounts due Contractor on account of Work covered by allowances, and the Contract Price shall be correspondingly adjusted.

13.03 *Unit Price Work*

A. Where the Contract Documents provide that all or part of the Work is to be Unit Price Work, initially the Contract Price will be deemed to include for all Unit Price Work an amount equal to the sum of the unit price for each separately identified item of Unit Price Work times the estimated quantity of each item as indicated in the Agreement.

B. The estimated quantities of items of Unit Price Work are not guaranteed and are solely for the purpose of comparison of Bids and determining an initial Contract Price. Payments to Contractor for Unit Price Work will be based on actual quantities.

C. Each unit price will be deemed to include an amount considered by Contractor to be adequate to cover Contractor's overhead and profit for each separately identified item.

D. Engineer will determine the actual quantities and classifications of Unit Price Work performed by Contractor. Engineer will review with Contractor the Engineer's preliminary determinations on such matters before rendering a written decision thereon (by recommendation of an Application for Payment or otherwise). Engineer's written decision thereon will be final and binding (except as modified by Engineer to reflect changed factual conditions or more accurate data) upon Owner and Contractor, subject to the provisions of the following paragraph.

E. Within 30 days of Engineer's written decision under the preceding paragraph, Contractor may submit a Change Proposal, or Owner may file a Claim, seeking an adjustment in the Contract Price if:

1. the quantity of any item of Unit Price Work performed by Contractor differs materially and significantly from the estimated quantity of such item indicated in the Agreement;

2. there is no corresponding adjustment with respect to any other item of Work; and

3. Contractor believes that it is entitled to an increase in Contract Price as a result of having incurred additional expense or Owner believes that Owner is entitled to a decrease in Contract Price, and the parties are unable to agree as to the amount of any such increase or decrease.

other than the negligence of Contractor, any Subcontractor, or anyone directly or indirectly employed by any of them or for whose acts any of them may be liable. Such losses shall include settlements made with the written consent and approval of Owner. No such losses, damages, and expenses shall be included in the Cost of the Work for the purpose of determining Contractor's fee.

g. The cost of utilities, fuel, and sanitary facilities at the Site.

h. Minor expenses such as communication service at the Site, express and courier services, and similar petty cash items in connection with the Work.

i. The costs of premiums for all bonds and insurance that Contractor is required by the Contract Documents to purchase and maintain.

C. *Costs Excluded*: The term Cost of the Work shall not include any of the following items:

1. Payroll costs and other compensation of Contractor's officers, executives, principals (of partnerships and sole proprietorships), general managers, safety managers, engineers, architects, estimators, attorneys, auditors, accountants, purchasing and contracting agents, expediters, timekeepers, clerks, and other personnel employed by Contractor, whether at the Site or in Contractor's principal or branch office for general administration of the Work and not specifically included in the agreed upon schedule of job classifications referred to in Paragraph 13.01.B.1 or specifically covered by Paragraph 13.01.B.4. The payroll costs and other compensation excluded here are to be considered administrative costs covered by the Contractor's fee.

2. Expenses of Contractor's principal and branch offices other than Contractor's office at the Site.

3. Any part of Contractor's capital expenses, including interest on Contractor's capital employed for the Work and charges against Contractor for delinquent payments.

4. Costs due to the negligence of Contractor, any Subcontractor, or anyone directly or indirectly employed by any of them or for whose acts any of them may be liable, including but not limited to, the correction of defective Work, disposal of materials or equipment wrongly supplied, and making good any damage to property.

5. Other overhead or general expense costs of any kind and the costs of any item not specifically and expressly included in Paragraph 13.01.B.

D. *Contractor's Fee*: When the Work as a whole is performed on the basis of cost-plus, Contractor's fee shall be determined as set forth in the Agreement. When the value of any Work covered by a Change Order, Change Proposal, Claim, set-off, or other adjustment in Contract Price is determined on the basis of Cost of the Work, Contractor's fee shall be determined as set forth in Paragraph 11.04.C.

E. *Documentation*: Whenever the Cost of the Work for any purpose is to be determined pursuant to this Article 13, Contractor will establish and maintain records thereof in accordance with generally accepted accounting practices and submit in a form acceptable to Engineer an itemized cost breakdown together with supporting data.

13.02 *Allowances*

A. It is understood that Contractor has included in the Contract Price all allowances so named in the Contract Documents and shall cause the Work so covered to be performed for such sums and by such persons or entities as may be acceptable to Owner and Engineer.

thereto. The expenses of performing Work outside of regular working hours, on Saturday, Sunday, or legal holidays, shall be included in the above to the extent authorized by Owner.

2. Cost of all materials and equipment furnished and incorporated in the Work, including costs of transportation and storage thereof, and Suppliers' field services required in connection therewith. All cash discounts shall accrue to Contractor unless Owner deposits funds with Contractor with which to make payments, in which case the cash discounts shall accrue to Owner. All trade discounts, rebates, and refunds and returns from sale of surplus materials and equipment shall accrue to Owner, and Contractor shall make provisions so that they may be obtained.

3. Payments made by Contractor to Subcontractors for Work performed by Subcontractors. If required by Owner, Contractor shall obtain competitive bids from subcontractors acceptable to Owner and Contractor and shall deliver such bids to Owner, who will then determine, with the advice of Engineer, which bids, if any, will be acceptable. If any subcontract provides that the Subcontractor is to be paid on the basis of Cost of the Work plus a fee, the Subcontractor's Cost of the Work and fee shall be determined in the same manner as Contractor's Cost of the Work and fee as provided in this Paragraph 13.01.

4. Costs of special consultants (including but not limited to engineers, architects, testing laboratories, surveyors, attorneys, and accountants) employed for services specifically related to the Work.

5. Supplemental costs including the following:

    a. The proportion of necessary transportation, travel, and subsistence expenses of Contractor's employees incurred in discharge of duties connected with the Work.

    b. Cost, including transportation and maintenance, of all materials, supplies, equipment, machinery, appliances, office, and temporary facilities at the Site, and hand tools not owned by the workers, which are consumed in the performance of the Work, and cost, less market value, of such items used but not consumed which remain the property of Contractor.

    c. Rentals of all construction equipment and machinery, and the parts thereof, whether rented from Contractor or others in accordance with rental agreements approved by Owner with the advice of Engineer, and the costs of transportation, loading, unloading, assembly, dismantling, and removal thereof. All such costs shall be in accordance with the terms of said rental agreements. The rental of any such equipment, machinery, or parts shall cease when the use thereof is no longer necessary for the Work.

    d. Sales, consumer, use, and other similar taxes related to the Work, and for which Contractor is liable, as imposed by Laws and Regulations.

    e. Deposits lost for causes other than negligence of Contractor, any Subcontractor, or anyone directly or indirectly employed by any of them or for whose acts any of them may be liable, and royalty payments and fees for permits and licenses.

    f. Losses and damages (and related expenses) caused by damage to the Work, not compensated by insurance or otherwise, sustained by Contractor in connection with the performance of the Work (except losses and damages within the deductible amounts of property insurance established in accordance with Paragraph 6.05), provided such losses and damages have resulted from causes

submittal and decision process shall resume as of the date of the conclusion of the mediation, as determined by the mediator.

3. Owner and Contractor shall each pay one-half of the mediator's fees and costs.

E. *Partial Approval*: If the party receiving a Claim approves the Claim in part and denies it in part, such action shall be final and binding unless within 30 days of such action the other party invokes the procedure set forth in Article 17 for final resolution of disputes.

F. *Denial of Claim*: If efforts to resolve a Claim are not successful, the party receiving the Claim may deny it by giving written notice of denial to the other party. If the receiving party does not take action on the Claim within 90 days, then either Owner or Contractor may at any time thereafter submit a letter to the other party indicating that as a result of the inaction, the Claim is deemed denied, thereby commencing the time for appeal of the denial. A denial of the Claim shall be final and binding unless within 30 days of the denial the other party invokes the procedure set forth in Article 17 for the final resolution of disputes.

G. *Final and Binding Results*: If the parties reach a mutual agreement regarding a Claim, whether through approval of the Claim, direct negotiations, mediation, or otherwise; or if a Claim is approved in part and denied in part, or denied in full, and such actions become final and binding; then the results of the agreement or action on the Claim shall be incorporated in a Change Order to the extent they affect the Contract, including the Work, the Contract Times, or the Contract Price.

ARTICLE 13 – COST OF THE WORK; ALLOWANCES; UNIT PRICE WORK

13.01 *Cost of the Work*

A. *Purposes for Determination of Cost of the Work*: The term Cost of the Work means the sum of all costs necessary for the proper performance of the Work at issue, as further defined below. The provisions of this Paragraph 13.01 are used for two distinct purposes:

1. To determine Cost of the Work when Cost of the Work is a component of the Contract Price, under cost-plus-fee, time-and-materials, or other cost-based terms; or

2. To determine the value of a Change Order, Change Proposal, Claim, set-off, or other adjustment in Contract Price. When the value of any such adjustment is determined on the basis of Cost of the Work, Contractor is entitled only to those additional or incremental costs required because of the change in the Work or because of the event giving rise to the adjustment.

B. *Costs Included*: Except as otherwise may be agreed to in writing by Owner, costs included in the Cost of the Work shall be in amounts no higher than those prevailing in the locality of the Project, shall not include any of the costs itemized in Paragraph 13.01.C, and shall include only the following items:

1. Payroll costs for employees in the direct employ of Contractor in the performance of the Work under schedules of job classifications agreed upon by Owner and Contractor. Such employees shall include, without limitation, superintendents, foremen, and other personnel employed full time on the Work. Payroll costs for employees not employed full time on the Work shall be apportioned on the basis of their time spent on the Work. Payroll costs shall include, but not be limited to, salaries and wages plus the cost of fringe benefits, which shall include social security contributions, unemployment, excise, and payroll taxes, workers' compensation, health and retirement benefits, bonuses, sick leave, and vacation and holiday pay applicable

B. If Owner or Contractor refuses to execute a Change Order that is required to be executed under the terms of this Paragraph 11.07, it shall be deemed to be of full force and effect, as if fully executed.

11.08 *Notification to Surety*

A. If the provisions of any bond require notice to be given to a surety of any change affecting the general scope of the Work or the provisions of the Contract Documents (including, but not limited to, Contract Price or Contract Times), the giving of any such notice will be Contractor's responsibility. The amount of each applicable bond will be adjusted to reflect the effect of any such change.

ARTICLE 12 – CLAIMS

12.01 *Claims*

A. *Claims Process*: The following disputes between Owner and Contractor shall be submitted to the Claims process set forth in this Article:

1. Appeals by Owner or Contractor of Engineer's decisions regarding Change Proposals;
2. Owner demands for adjustments in the Contract Price or Contract Times, or other relief under the Contract Documents; and
3. Disputes that Engineer has been unable to address because they do not involve the design (as set forth in the Drawings, Specifications, or otherwise), the acceptability of the Work, or other engineering or technical matters.

B. *Submittal of Claim*: The party submitting a Claim shall deliver it directly to the other party to the Contract promptly (but in no event later than 30 days) after the start of the event giving rise thereto; in the case of appeals regarding Change Proposals within 30 days of the decision under appeal. The party submitting the Claim shall also furnish a copy to the Engineer, for its information only. The responsibility to substantiate a Claim shall rest with the party making the Claim. In the case of a Claim by Contractor seeking an increase in the Contract Times or Contract Price, or both, Contractor shall certify that the Claim is made in good faith, that the supporting data are accurate and complete, and that to the best of Contractor's knowledge and belief the amount of time or money requested accurately reflects the full amount to which Contractor is entitled.

C. *Review and Resolution*: The party receiving a Claim shall review it thoroughly, giving full consideration to its merits. The two parties shall seek to resolve the Claim through the exchange of information and direct negotiations. The parties may extend the time for resolving the Claim by mutual agreement. All actions taken on a Claim shall be stated in writing and submitted to the other party, with a copy to Engineer.

D. *Mediation*:

1. At any time after initiation of a Claim, Owner and Contractor may mutually agree to mediation of the underlying dispute. The agreement to mediate shall stay the Claim submittal and response process.
2. If Owner and Contractor agree to mediation, then after 60 days from such agreement, either Owner or Contractor may unilaterally terminate the mediation process, and the Claim submittal and decision process shall resume as of the date of the termination. If the mediation proceeds but is unsuccessful in resolving the dispute, the Claim

the Contract. The Change Proposal shall specify any proposed change in Contract Times or Contract Price, or both, or other proposed relief, and explain the reason for the proposed change, with citations to any governing or applicable provisions of the Contract Documents.

1. *Procedures*: Contractor shall submit each Change Proposal to Engineer promptly (but in no event later than 30 days) after the start of the event giving rise thereto, or after such initial decision. The Contractor shall submit supporting data, including the proposed change in Contract Price or Contract Time (if any), to the Engineer and Owner within 15 days after the submittal of the Change Proposal. The supporting data shall be accompanied by a written statement that the supporting data are accurate and complete, and that any requested time or price adjustment is the entire adjustment to which Contractor believes it is entitled as a result of said event. Engineer will advise Owner regarding the Change Proposal, and consider any comments or response from Owner regarding the Change Proposal.

2. *Engineer's Action*: Engineer will review each Change Proposal and, within 30 days after receipt of the Contractor's supporting data, either deny the Change Proposal in whole, approve it in whole, or deny it in part and approve it in part. Such actions shall be in writing, with a copy provided to Owner and Contractor. If Engineer does not take action on the Change Proposal within 30 days, then either Owner or Contractor may at any time thereafter submit a letter to the other party indicating that as a result of Engineer's inaction the Change Proposal is deemed denied, thereby commencing the time for appeal of the denial under Article 12.

3. *Binding Decision*: Engineer's decision will be final and binding upon Owner and Contractor, unless Owner or Contractor appeals the decision by filing a Claim under Article 12.

B. *Resolution of Certain Change Proposals*: If the Change Proposal does not involve the design (as set forth in the Drawings, Specifications, or otherwise), the acceptability of the Work, or other engineering or technical matters, then Engineer will notify the parties that the Engineer is unable to resolve the Change Proposal. For purposes of further resolution of such a Change Proposal, such notice shall be deemed a denial, and Contractor may choose to seek resolution under the terms of Article 12.

11.07 *Execution of Change Orders*

A. Owner and Contractor shall execute appropriate Change Orders covering:

1. changes in the Contract Price or Contract Times which are agreed to by the parties, including any undisputed sum or amount of time for Work actually performed in accordance with a Work Change Directive;

2. changes in Contract Price resulting from an Owner set-off, unless Contractor has duly contested such set-off;

3. changes in the Work which are: (a) ordered by Owner pursuant to Paragraph 11.02, (b) required because of Owner's acceptance of defective Work under Paragraph 14.04 or Owner's correction of defective Work under Paragraph 14.07, or (c) agreed to by the parties, subject to the need for Engineer's recommendation if the change in the Work involves the design (as set forth in the Drawings, Specifications, or otherwise), or other engineering or technical matters; and

4. changes in the Contract Price or Contract Times, or other changes, which embody the substance of any final and binding results under Paragraph 11.06, or Article 12.

the basis of the Cost of the Work (determined as provided in Paragraph 13.01) plus a Contractor's fee for overhead and profit (determined as provided in Paragraph 11.04.C).

C. *Contractor's Fee*: When applicable, the Contractor's fee for overhead and profit shall be determined as follows:

1. a mutually acceptable fixed fee; or

2. if a fixed fee is not agreed upon, then a fee based on the following percentages of the various portions of the Cost of the Work:

   a. for costs incurred under Paragraphs 13.01.B.1 and 13.01.B.2, the Contractor's fee shall be 15 percent;

   b. for costs incurred under Paragraph 13.01.B.3, the Contractor's fee shall be five percent;

   c. where one or more tiers of subcontracts are on the basis of Cost of the Work plus a fee and no fixed fee is agreed upon, the intent of Paragraphs 11.04.C.2.a and 11.04.C.2.b is that the Contractor's fee shall be based on: (1) a fee of 15 percent of the costs incurred under Paragraphs 13.01.A.1 and 13.01.A.2 by the Subcontractor that actually performs the Work, at whatever tier, and (2) with respect to Contractor itself and to any Subcontractors of a tier higher than that of the Subcontractor that actually performs the Work, a fee of five percent of the amount (fee plus underlying costs incurred) attributable to the next lower tier Subcontractor; provided, however, that for any such subcontracted work the maximum total fee to be paid by Owner shall be no greater than 27 percent of the costs incurred by the Subcontractor that actually performs the work;

   d. no fee shall be payable on the basis of costs itemized under Paragraphs 13.01.B.4, 13.01.B.5, and 13.01.C;

   e. the amount of credit to be allowed by Contractor to Owner for any change which results in a net decrease in cost will be the amount of the actual net decrease in cost plus a deduction in Contractor's fee by an amount equal to five percent of such net decrease; and

   f. when both additions and credits are involved in any one change, the adjustment in Contractor's fee shall be computed on the basis of the net change in accordance with Paragraphs 11.04.C.2.a through 11.04.C.2.e, inclusive.

11.05 *Change of Contract Times*

A. The Contract Times may only be changed by a Change Order. Any Change Proposal for an adjustment in the Contract Times shall comply with the provisions of Paragraph 11.06. Any Claim for an adjustment in the Contract Times shall comply with the provisions of Article 12.

B. An adjustment of the Contract Times shall be subject to the limitations set forth in Paragraph 4.05, concerning delays in Contractor's progress.

11.06 *Change Proposals*

A. Contractor shall submit a Change Proposal to Engineer to request an adjustment in the Contract Times or Contract Price; appeal an initial decision by Engineer concerning the requirements of the Contract Documents or relating to the acceptability of the Work under the Contract Documents; contest a set-off against payment due; or seek other relief under

adjustment of the Contract Price or the Contract Times, or both, no later than 30 days after the completion of the Work set out in the Work Change Directive. Owner must submit any Claim seeking an adjustment of the Contract Price or the Contract Times, or both, no later than 60 days after issuance of the Work Change Directive.

3. *Field Orders*: Engineer may authorize minor changes in the Work if the changes do not involve an adjustment in the Contract Price or the Contract Times and are compatible with the design concept of the completed Project as a functioning whole as indicated by the Contract Documents. Such changes will be accomplished by a Field Order and will be binding on Owner and also on Contractor, which shall perform the Work involved promptly. If Contractor believes that a Field Order justifies an adjustment in the Contract Price or Contract Times, or both, then before proceeding with the Work at issue, Contractor shall submit a Change Proposal as provided herein.

11.02 *Owner-Authorized Changes in the Work*

A. Without invalidating the Contract and without notice to any surety, Owner may, at any time or from time to time, order additions, deletions, or revisions in the Work. Such changes shall be supported by Engineer's recommendation, to the extent the change involves the design (as set forth in the Drawings, Specifications, or otherwise), or other engineering or technical matters. Such changes may be accomplished by a Change Order, if Owner and Contractor have agreed as to the effect, if any, of the changes on Contract Times or Contract Price; or by a Work Change Directive. Upon receipt of any such document, Contractor shall promptly proceed with the Work involved; or, in the case of a deletion in the Work, promptly cease construction activities with respect to such deleted Work. Added or revised Work shall be performed under the applicable conditions of the Contract Documents. Nothing in this paragraph shall obligate Contractor to undertake work that Contractor reasonably concludes cannot be performed in a manner consistent with Contractor's safety obligations under the Contract Documents or Laws and Regulations.

11.03 *Unauthorized Changes in the Work*

A. Contractor shall not be entitled to an increase in the Contract Price or an extension of the Contract Times with respect to any work performed that is not required by the Contract Documents, as amended, modified, or supplemented, except in the case of an emergency as provided in Paragraph 7.15 or in the case of uncovering Work as provided in Paragraph 14.05.

11.04 *Change of Contract Price*

A. The Contract Price may only be changed by a Change Order. Any Change Proposal for an adjustment in the Contract Price shall comply with the provisions of Paragraph 11.06. Any Claim for an adjustment of Contract Price shall comply with the provisions of Article 12.

B. An adjustment in the Contract Price will be determined as follows:

1. where the Work involved is covered by unit prices contained in the Contract Documents, then by application of such unit prices to the quantities of the items involved (subject to the provisions of Paragraph 13.03); or

2. where the Work involved is not covered by unit prices contained in the Contract Documents, then by a mutually agreed lump sum (which may include an allowance for overhead and profit not necessarily in accordance with Paragraph 11.04.C.2); or

3. where the Work involved is not covered by unit prices contained in the Contract Documents and the parties do not reach mutual agreement to a lump sum, then on

B. Engineer will not supervise, direct, control, or have authority over or be responsible for Contractor's means, methods, techniques, sequences, or procedures of construction, or the safety precautions and programs incident thereto, or for any failure of Contractor to comply with Laws and Regulations applicable to the performance of the Work. Engineer will not be responsible for Contractor's failure to perform the Work in accordance with the Contract Documents.

C. Engineer will not be responsible for the acts or omissions of Contractor or of any Subcontractor, any Supplier, or of any other individual or entity performing any of the Work.

D. Engineer's review of the final Application for Payment and accompanying documentation and all maintenance and operating instructions, schedules, guarantees, bonds, certificates of inspection, tests and approvals, and other documentation required to be delivered by Paragraph 15.06.A will only be to determine generally that their content complies with the requirements of, and in the case of certificates of inspections, tests, and approvals, that the results certified indicate compliance with the Contract Documents.

E. The limitations upon authority and responsibility set forth in this Paragraph 10.08 shall also apply to the Resident Project Representative, if any.

10.09 *Compliance with Safety Program*

A. While at the Site, Engineer's employees and representatives will comply with the specific applicable requirements of Owner's and Contractor's safety programs (if any) of which Engineer has been informed.

ARTICLE 11 – AMENDING THE CONTRACT DOCUMENTS; CHANGES IN THE WORK

11.01 *Amending and Supplementing Contract Documents*

A. The Contract Documents may be amended or supplemented by a Change Order, a Work Change Directive, or a Field Order.

1. *Change Orders*:

a. If an amendment or supplement to the Contract Documents includes a change in the Contract Price or the Contract Times, such amendment or supplement must be set forth in a Change Order. A Change Order also may be used to establish amendments and supplements of the Contract Documents that do not affect the Contract Price or Contract Times.

b. Owner and Contractor may amend those terms and conditions of the Contract Documents that do not involve (1) the performance or acceptability of the Work, (2) the design (as set forth in the Drawings, Specifications, or otherwise), or (3) other engineering or technical matters, without the recommendation of the Engineer. Such an amendment shall be set forth in a Change Order.

2. *Work Change Directives*: A Work Change Directive will not change the Contract Price or the Contract Times but is evidence that the parties expect that the modification ordered or documented by a Work Change Directive will be incorporated in a subsequently issued Change Order, following negotiations by the parties as to the Work Change Directive's effect, if any, on the Contract Price and Contract Times; or, if negotiations are unsuccessful, by a determination under the terms of the Contract Documents governing adjustments, expressly including Paragraph 11.04 regarding change of Contract Price. Contractor must submit any Change Proposal seeking an

or as a result of Engineer's visits or observations of Contractor's Work, Engineer will not supervise, direct, control, or have authority over or be responsible for Contractor's means, methods, techniques, sequences, or procedures of construction, or the safety precautions and programs incident thereto, or for any failure of Contractor to comply with Laws and Regulations applicable to the performance of the Work.

10.03 *Project Representative*

A. If Owner and Engineer have agreed that Engineer will furnish a Resident Project Representative to represent Engineer at the Site and assist Engineer in observing the progress and quality of the Work, then the authority and responsibilities of any such Resident Project Representative will be as provided in the Supplementary Conditions, and limitations on the responsibilities thereof will be as provided in Paragraph 10.08. If Owner designates another representative or agent to represent Owner at the Site who is not Engineer's consultant, agent, or employee, the responsibilities and authority and limitations thereon of such other individual or entity will be as provided in the Supplementary Conditions.

10.04 *Rejecting Defective Work*

A. Engineer has the authority to reject Work in accordance with Article 14.

10.05 *Shop Drawings, Change Orders and Payments*

A. Engineer's authority, and limitations thereof, as to Shop Drawings and Samples, are set forth in Paragraph 7.16.

B. Engineer's authority, and limitations thereof, as to design calculations and design drawings submitted in response to a delegation of professional design services, if any, are set forth in Paragraph 7.19.

C. Engineer's authority as to Change Orders is set forth in Article 11.

D. Engineer's authority as to Applications for Payment is set forth in Article 15.

10.06 *Determinations for Unit Price Work*

A. Engineer will determine the actual quantities and classifications of Unit Price Work performed by Contractor as set forth in Paragraph 13.03.

10.07 *Decisions on Requirements of Contract Documents and Acceptability of Work*

A. Engineer will render decisions regarding the requirements of the Contract Documents, and judge the acceptability of the Work, pursuant to the specific procedures set forth herein for initial interpretations, Change Proposals, and acceptance of the Work. In rendering such decisions and judgments, Engineer will not show partiality to Owner or Contractor, and will not be liable to Owner, Contractor, or others in connection with any proceedings, interpretations, decisions, or judgments conducted or rendered in good faith.

10.08 *Limitations on Engineer's Authority and Responsibilities*

A. Neither Engineer's authority or responsibility under this Article 10 or under any other provision of the Contract, nor any decision made by Engineer in good faith either to exercise or not exercise such authority or responsibility or the undertaking, exercise, or performance of any authority or responsibility by Engineer, shall create, impose, or give rise to any duty in contract, tort, or otherwise owed by Engineer to Contractor, any Subcontractor, any Supplier, any other individual or entity, or to any surety for or employee or agent of any of them.

9.08 *Inspections, Tests, and Approvals*

A. Owner's responsibility with respect to certain inspections, tests, and approvals is set forth in Paragraph 14.02.B.

9.09 *Limitations on Owner's Responsibilities*

A. The Owner shall not supervise, direct, or have control or authority over, nor be responsible for, Contractor's means, methods, techniques, sequences, or procedures of construction, or the safety precautions and programs incident thereto, or for any failure of Contractor to comply with Laws and Regulations applicable to the performance of the Work. Owner will not be responsible for Contractor's failure to perform the Work in accordance with the Contract Documents.

9.10 *Undisclosed Hazardous Environmental Condition*

A. Owner's responsibility in respect to an undisclosed Hazardous Environmental Condition is set forth in Paragraph 5.06.

9.11 *Evidence of Financial Arrangements*

A. Upon request of Contractor, Owner shall furnish Contractor reasonable evidence that financial arrangements have been made to satisfy Owner's obligations under the Contract Documents (including obligations under proposed changes in the Work).

9.12 *Safety Programs*

A. While at the Site, Owner's employees and representatives shall comply with the specific applicable requirements of Contractor's safety programs of which Owner has been informed.

B. Owner shall furnish copies of any applicable Owner safety programs to Contractor.

ARTICLE 10 – ENGINEER'S STATUS DURING CONSTRUCTION

10.01 *Owner's Representative*

A. Engineer will be Owner's representative during the construction period. The duties and responsibilities and the limitations of authority of Engineer as Owner's representative during construction are set forth in the Contract.

10.02 *Visits to Site*

A. Engineer will make visits to the Site at intervals appropriate to the various stages of construction as Engineer deems necessary in order to observe as an experienced and qualified design professional the progress that has been made and the quality of the various aspects of Contractor's executed Work. Based on information obtained during such visits and observations, Engineer, for the benefit of Owner, will determine, in general, if the Work is proceeding in accordance with the Contract Documents. Engineer will not be required to make exhaustive or continuous inspections on the Site to check the quality or quantity of the Work. Engineer's efforts will be directed toward providing for Owner a greater degree of confidence that the completed Work will conform generally to the Contract Documents. On the basis of such visits and observations, Engineer will keep Owner informed of the progress of the Work and will endeavor to guard Owner against defective Work.

B. Engineer's visits and observations are subject to all the limitations on Engineer's authority and responsibility set forth in Paragraph 10.08. Particularly, but without limitation, during

D. If Contractor damages, delays, disrupts, or interferes with the work of any other contractor, or any utility owner performing other work at or adjacent to the Site, through Contractor's failure to take reasonable and customary measures to avoid such impacts, or if any claim arising out of Contractor's actions, inactions, or negligence in performance of the Work at or adjacent to the Site is made by any such other contractor or utility owner against Contractor, Owner, or Engineer, then Contractor shall (1) promptly attempt to settle the claim as to all parties through negotiations with such other contractor or utility owner, or otherwise resolve the claim by arbitration or other dispute resolution proceeding or at law, and (2) indemnify and hold harmless Owner and Engineer, and the officers, directors, members, partners, employees, agents, consultants and subcontractors of each and any of them from and against any such claims, and against all costs, losses, and damages (including but not limited to all fees and charges of engineers, architects, attorneys, and other professionals and all court or arbitration or other dispute resolution costs) arising out of or relating to such damage, delay, disruption, or interference.

ARTICLE 9 – OWNER'S RESPONSIBILITIES

9.01 *Communications to Contractor*

A. Except as otherwise provided in these General Conditions, Owner shall issue all communications to Contractor through Engineer.

9.02 *Replacement of Engineer*

A. Owner may at its discretion appoint an engineer to replace Engineer, provided Contractor makes no reasonable objection to the replacement engineer. The replacement engineer's status under the Contract Documents shall be that of the former Engineer.

9.03 *Furnish Data*

A. Owner shall promptly furnish the data required of Owner under the Contract Documents.

9.04 *Pay When Due*

A. Owner shall make payments to Contractor when they are due as provided in the Agreement.

9.05 *Lands and Easements; Reports, Tests, and Drawings*

A. Owner's duties with respect to providing lands and easements are set forth in Paragraph 5.01.

B. Owner's duties with respect to providing engineering surveys to establish reference points are set forth in Paragraph 4.03.

C. Article 5 refers to Owner's identifying and making available to Contractor copies of reports of explorations and tests of conditions at the Site, and drawings of physical conditions relating to existing surface or subsurface structures at the Site.

9.06 *Insurance*

A. Owner's responsibilities, if any, with respect to purchasing and maintaining liability and property insurance are set forth in Article 6.

9.07 *Change Orders*

A. Owner's responsibilities with respect to Change Orders are set forth in Article 11.

SECTION 203
SEEDING

PART 1 - GENERAL

1.1 SCOPE OF WORK

A. Seeding is required on all areas (unless otherwise stated in the plans) where existing topsoil or vegetation is modified, damaged, or otherwise disturbed during construction of this project and in areas where erosion protection is required.

B. Seeding work includes:
   1. Preparation of subsoil.
   2. Placing topsoil.
   3. Fertilizing.
   4. Seeding.
   5. Mulching.
   6. Maintenance.

C. In the event of a conflict between this specification and project plans (drawings) then the plans will take precedence.

1.2 DEFINITIONS

Weeds: Includes Dandelion, Jimsonweed, Quackgrass, Horsetail, Morning Glory, Rush Grass, Mustard, Lambsquarter, Chickweed, Cress, Crabgrass, Canadian Thistle, Nutgrass, Poison Oak, Blackberry, Tansy Ragwort, Johnson Grass, Poison Ivy, Nut Sedge, Nimble Will, Bindweed, Bent Grass, Wild Garlic, Perennial Sorrel, and Brome Grass.

1.3 REGULATORY REQUIREMENTS

Comply with regulatory agencies for fertilizer and herbicide composition.

1.4 QUALITY ASSURANCE

Provide seed mixture in containers showing percentage of seed mix, year of production, net weight, date of packaging, and location of packaging.

1.5 DELIVERY, STORAGE, AND HANDLING

Deliver grass seed mixture in sealed containers. Seed in damaged packaging is not acceptable. Deliver fertilizer in waterproof bags showing weight, chemical analysis, and name of manufacturer.

1.6 MAINTENANCE SERVICE

Maintain seeded areas immediately after placement until grass is well established and exhibits a vigorous growing condition covering 75 percent of the seeded area, with no bare areas larger than one square foot.

1.7 SUBMITTALS

Submit information as to fertilizer, seed type(s), seeding procedures, etc. in accordance with Contractor's Submittals.

PART 2 - PRODUCTS

2.1 SEED MIXTURE

Seed Mixture: 1) Type 1: Hulled Bermuda
2) Type 2: Rye

2.2 SOIL MATERIALS

Topsoil: Excavated from site and free of weeds, roots, stone and foreign matter.

2.3 ACCESSORIES

A. Fertilizer: As recommended for grass with the following proportions: Nitrogen, 13 percent; phosphoric acid, 13 percent; and soluble potash, 13 percent, or approved substitute.

B. Water: Clean, fresh and free of substances or matter which could inhibit vigorous growth of grass.

C. Erosion Fabric: To be placed on all slopes steeper than 3:1 and other specific locations shown on the Plans.

PART 3 - EXECUTION

3.1 INSPECTION

Verify that prepared soil base is ready to receive the work of this section. Beginning work on this item shall be interpreted as CONTRACTOR's acceptance of existing site conditions.

3.2 PREPARATIONS OF SUBSOIL

A. Prepare subsoil to eliminate uneven areas and low spots. Maintain lines, levels profiles and contours. Make changes in grade gradual and blend slopes into level areas.

B. Remove foreign materials, weeds, undesirable plants and their roots, and contaminated subsoil.

C. Scarify subsoil to a depth of 3" where topsoil is to be placed. Repeat cultivation in areas where equipment, used for hauling and spreading topsoil, has compacted subsoil.

3.3 PLACING TOPSOIL

A. Place topsoil during dry weather and on dry, unfrozen subgrade.

B. Remove vegetative material and foreign non-organic material while spreading.

C. Grade to eliminate rough, low, or soft areas, and to ensure positive drainage.

3.4 FERTILIZING

A. Apply fertilizer after smooth raking of topsoil in accordance with manufacturer's instructions at a minimum rate of 200 lb/acre.

B. Do not apply fertilizer at the same time or with the same machine that will be used to apply seed unless hydro mulching.

C. Mix fertilizer thoroughly into upper 2" of topsoil.

D. Lightly water to aid the dissipation of fertilizer.

3.5 SEEDING

A. Apply seed at a rate of 12 lbs per acre (Type 1), or 30 lbs per acre (Type 2) and rake in lightly.

B. Planting Season:

1. Type 1: April 15 to September 1
2. Type 2: September 1 to April 15.

C. Do not sow immediately following a heavy rain, when ground is too dry, or during windy periods.

D. Apply water with a fine spray immediately after each area has been mulched. Saturate to 4".

E. Grass planting of seed mixture by hydro mulching shall be acceptable. Hydro mulching shall consist of applying water, seed, fertilizer and fibrous mulch and shall generally conform to the requirements listed by the Texas Department of Transportation *Standard Specifications for Construction of Highways, Streets and Bridges.*

3.6 SEED PROTECTION

A. Cover seeded slopes where grade is steeper than 3:1 with erosion fabric. Roll fabric onto slopes without stretching or pulling.

B. Lay fabric smoothly on surface, bury top end of each section in 6" deep excavated topsoil trench. Provide 3" overlap of adjacent rolls. Backfill trench and rake smooth, level with adjacent soil.

C. Secure outside edges and overlaps at 36" intervals with stakes.

D. Lightly dress slopes with topsoil to ensure close contact between fabric and soil.

E. At sides of ditches, lay fabric laps in direction of water flow. Lap ends and edges a minimum of 6".

3.7 MAINTENANCE

A. Owner will water to prevent drying of grass and soil.

B. Control growth of weeds: Owner will apply herbicides in accordance with manufacturer's instructions. Remedy damage resulting from improper use of herbicides.

C. Contractor will immediately reseed areas which show bare spots of one square foot and larger.

END OF SECTION

SECTION 205
WATERLINE INSTALLATION

PART 1 - GENERAL

1.1 SCOPE OF WORK

This work consists of constructing water mains and service branches, including fire hydrants, water meters, service stops, valves, fittings and boxes. The CONTRACTOR shall provide all tools and equipment required for installing these items. The work also includes furnishing all materials, excavating, bedding, laying pipe, jointing, backfilling, hydrostatic testing, disinfection, restoration of disturbed facilities and surfaces, line (location) and grade, disposal of all surplus excavation and discarded materials, and other work necessary to complete the items. In the event of a conflict between this specification and the project plans (drawings) then the plans will take precedence.

1.2 JOB CONDITIONS

A. Control of Water: Provide sufficient pumping equipment in good working order, available at all times, to remove any water that accumulates in excavations. Where the waterline crosses natural drainage channels, conduct work in such a manner that unnecessary damage or delays in the prosecution of the work will be prevented. Make provisions for the satisfactory disposal of surface water pumped so as to prevent damage to public or private property.

B. Protection of Existing Utilities: It shall be the responsibility of the CONTRACTOR to verify the existence and location of all underground utilities along the route of the work. The omission from or the inclusion of utility locations on the Plans is not being considered as the non-existence of, or a definite location of existing underground utilities.

The CONTRACTOR shall take the necessary precautions to protect existing utilities from damage due to his operations. The CONTRACTOR shall notify DIG TESS, Texas One-Call System, and all other utility locator services to request utility locates. In addition, other utilities within the project area shall be notified to locate their utilities. CONTRACTOR shall keep a notebook of all location requests. Each notation will contain the following information: Date, Time, Brief Location Summary, Request ID Number, and Call Back Repair Number. Any damage to the utilities, whether marked or unmarked, will be repaired at the CONTRACTORS expense.

C. Protection of Trees, Plants and Shrubbery:

1. Where trees, plants and shrubbery are adjacent to the line of the work and are not to be removed and replaced, protect such trees, plants, shrubbery, etc., by substantial wooden boxes and guards and do not permit machinery or employees to scrape, tear the limbs from or damage or attach guy cables to them and if, in the opinion of the ENGINEER, such trees, plants and shrubbery would be damaged by machinery, etc., hand excavation may be required. The CONTRACTOR shall be responsible for all damages to adjacent trees, plants and shrubbery.
2. Where waterlines cross lawns, remove the sod for the full width of the excavation. Lawns are defined as those areas where, in the opinion of the ENGINEER, grasses such a Bermuda, St. Augustine, Fescue or other similar grasses generally cover the area being excavated and generally have been kept mowed to a height of 6" or less. Remove sod in squared cut out with a sharp spade, and of such sizes that they may be handled conveniently without breaking. The sod shall be removed in one layer not less than 3" in depth, and shall be carefully stored and given proper attention. During hot, dry weather, the stored sod shall be protected by covering with canvas or burlap. After backfilling is completed, replaced sod, tamp and water sod thoroughly.

D. Protection of Streets and Roadways:

1. Where waterlines cross public streets, no more than one-half of the street may be closed at one time and that one-half for only 24 hours. Where waterlines cross plant roadways, an all access road shall be constructed if required to maintain access to any facility served by the severed road. Cover trenches crossing roadways and streets with 1" minimum thickness steel plates until backfill is complete and compacted. On heavily traveled streets as determined by the ENGINEER, steel plates are to remain in place until street pavement

repair is completed. After backfilling trenches in roadways and streets (either crossing or parallel), keep roadways and streets passable at all times. Cover and maintain the top of the trench with at least 4" of compacted flexible base until pavement repair is complete. Keep top of ditch elevation within plus or minus 2" of elevation of adjacent roadway or street. The work described above is not a separate pay item and the cost of labor and materials required to protect streets and roadways is to be included in the lump sum amount or unit price, as applicable.

2. Protect existing pavement, including plant roadways, from damage from heavy equipment and vehicles with lugs throughout construction. Saw cut pavement with a concrete saw before beginning excavation. Saw cuts are to be straight and parallel to the line of work.

1.3 GUARANTEE

A. Guarantee the backfilling of excavation and trenches against excessive (as determined by the ENGINEER) settlement for a period of one year after the final completion of the contract under which the work is performed.

B. Guarantee the backfilled ditch against erosion and erosional rivulets exceeding 3" in depth. The CONTRACTOR may, at his own cost, place erosion protection including jute mats, sodding, seeding and the like on erosion prone areas.

C. Make all repairs or replacements necessary by settlement or erosion including refilling and compacting the upper portion of the ditch and repairing broken or settled pavements within ten (10) days after notice from the ENGINEER or OWNER.

1.4 PAYMENT FOR COMPLETED PORTIONS

The OWNER will pay for ninety-five (95%) percent of the actual quantity of pipe laid and backfilled. The remainder shall be held in retainage.

1.5 STANDARD SPECIFICATIONS

All work related to this specification shall fully conform to the requirements of the latest published editions of the following Standard Specifications:

- Texas Department of Transportation Standards for Construction of Highways, Streets and Bridges
- ANSI B16.5 Pipe Flanges and Flanged Fittings: NPS 1/2 through NPS 24 Metric/Inch
- ASTM 1557 Test Methods for Laboratory Compaction Characteristics of Soil Using Modified Effort (56,000 ft-lbf/ft^3 (2,700 kN-m/m^3))
- ASTM A252 Welded and Seamless Steel Pipe Piles
- ASTM A536 Ductile Iron Castings
- ASTM B88M Seamless Copper Water Tube
- ASTM B584 Copper Alloy Sand Castings for General Applications
- ASTM C94 Ready-Mixed Concrete
- ASTM D1751 Preformed Expansion Joint Filler for Concrete Paving and Structural Construction
- ASTM D2241 Poly(Vinyl Chloride) (PVC) Pressure-Rated Pipe (SDR Series)
- ASTM F477 Elastomeric Seals (Gaskets) for Joining Plastic Pipe
- ASTM F1483 Oriented Poly(Vinyl Chloride), PVCO, Pressure Pipe
- AWWA C104 Cement-Mortar Lining for Ductile-Iron Pipe and Fittings
- AWWA C110 Ductile-Iron and Gray-Iron Fittings
- AWWA C111 /A21.11-17 Rubber-Gasket Joints for Ductile-Iron Pressure Pipe and Fittings
- AWWA C150 Thickness Design of Ductile-Iron Pipe

- AWWA C151 Ductile-Iron Pipe, Centrifugally Cast
- AWWA C153 Ductile-Iron Compact Fittings
- AWWA C502 Dry-Barrel Fire Hydrants
- AWWA C515 Reduced-Wall, Resilient-Seated Gate Valves for Water Supply Service
- AWWA C600 Installation of Ductile-Iron Mains and Their Appurtenances
- AWWA C605 Underground Installation of Polyvinyl Chloride (PVC) and Molecularly Oriented Polyvinyl Chloride (PVCO) Pressure Pipe and Fittings
- AWWA C651 Disinfecting Water Mains
- AWWA C700 Cold-Water Meters - Displacement Type, Metal Alloy Main Case
- AWWA C800 Underground Service Line Valves & Fittings
- AWWA C900 Polyvinyl Chloride (PVC) Pressure Pipe and Fabricated Fittings, 4 In. Through 12 In. (100 mm Through 300 mm), for Water Transmission and Distribution
- AWWA C901 Polyethylene (PE) Pressure Pipe and Tubing, 1/2 In. (13 mm) through 3 In. (76 mm), for Water Service
- AWWA C905 Polyvinyl Chloride (PVC) Pressure Pipe and Fabricated Fittings, 14 in. Through 48 in. (350 mm through 1,200 mm), for Water Transmission and Distribution
- AWWA C909 Molecularly Oriented Polyvinyl Chloride (PVCO) Pressure Pipe, 4 In. through 24 In. (100 mm through 600 mm) for Water, Wastewater, and Reclaimed Water Service
- NSF 60 Drinking Water Treatment Chemicals
- NSF 61 Drinking Water System Components – Health Effects
- WW-V-58 Iron Valve
- WW-V-54 Bronze Valve

PART 2 - PRODUCT

2.1 CONCRETE AND REINFORCING STEEL DESCRIPTION

This section covers the materials and installation of concrete and reinforced concrete for paving, structures, slabs, riprap, blocking and encasement.

A. Concrete: Concrete materials and construction methods should conform to Texas Department of Transportation Standards for Construction of Highways, Streets and Bridges except as modified and amended below.

Concrete for manhole base construction, blocking and encasement shall be Class B concrete with a maximum slump of 4".

Concrete for structures and riprap shall be Class A concrete with a maximum slump of 3".

Exposed concrete slabs shall have a steel troweled finish. Exposed riprap shall be float finished.

Concrete for paving shall be Class A concrete with a slump of 1" to 3".

The concrete finish for walking surfaces exposed to the weather shall be broom finished.

B. Reinforcing Steel: Reinforcing steel shall conform to Texas Department of Transportation Standards for Construction of Highways, Streets and Bridges, Item 440, Grade 60.

C. Expansion Joint: Expansion joint material shall be ½" asphalt impregnated fiberboard conforming to ASTM D1751.

D. Testing: Compression strength tests shall be performed on all reinforced concrete. The CONTRACTOR shall retain an approved testing laboratory which shall make one compression test set of three cylinders for each day's run or separate pour. Cylinders shall be continuously

cured in water until tested. The CONTRACTOR shall pay for and provide two (2) copies of test results to the ENGINEER.

2.2 PIPE MATERIALS

No materials shall be utilized which have been used for any purpose other than the conveyance of drinking water. All materials covered in this specification shall be of domestic origin only, unless noted otherwise. Similarly, all materials in this specification shall be America National Standards Institute/National Sanitation Foundation (ANSI/NSF) and America Water Works Association (AWWA) approved. Materials utilized shall conform to applicable current American Society of Testing Materials (ASTM) Standards. The pipe shall be transported to the job site by acceptable transportation methods and the front end of the pipes shall be covered with a tarp to prevent foreign materials from entering pipes. Each load of pipe and other materials delivered to the job-site will be inspected, before unloading, by the INSPECTOR or ENGINEER to assure that it meets specifications. The ENGINEER or OWNER shall have the right to reject any load of pipe that he feels does not meet the specifications. It will be the CONTRACTOR's and pipe manufacturer's responsibility to determine if any laboratory testing is warranted. The cost of any such testing will be borne by the CONTRACTOR. Any pipe with bell or gasket damage shall be immediately rejected and replaced at no additional cost to the OWNER.

The use of pipes and pipe fittings that contain more than 0.25% lead or solder and flux that contains more than 0.2% lead is prohibited.

All plastic pipe used in public water systems must also bear the National Sanitation Foundation Seal of Approval (NSF-pw) and have an ASTM design pressure rating of at least 150 psi or a standard dimension ratio of 26 or less.

PVC Pipe Materials: PVC pipe shall conform to AWWA C900, AWWA C905, AWWA C909 (Molecularly Oriented Polyvinyl Chloride (PVCO), C.I.O.D.), ASTM F1483 (Molecularly Oriented Polyvinyl Chloride (PVCO), I.P.S.) or ASTM D2241. Pipe joints shall be push-on type with a thickened bell, and shall conform to ASTM D3139 with a rubber gasket conforming to ASTM F477.

Qualification for potable-water service: PVC, PE, or PB compounds used to make pipe and couplings, as well as solvent cements used, shall contain no ingredient in an amount that has been demonstrated to migrate into water in quantities considered to be toxic, as tested in accordance with Sections 3 and 4 of National Sanitation Foundation (NSF) Standard Number 14. Such compounds or products shall be tested and certified as suitable for portable-water distribution products by the NSF Testing Laboratory or the Canadian Standards Association Testing Laboratory, or any other similarly accredited testing agency acceptable to the Laboratory.

A. Steel Pipe Materials: Steel casing pipe shall conform to ASTM A252 Grade 2 with a minimum wall thickness of 0.250 inch.

B. Ductile Iron Pipe Materials: Ductile iron pipe shall conform to ANSI/AWWA C151/A21.51 and to ANSI/AWWA C150/A21.50 for thickness design. The pipe shall be furnished with a cement mortar lining conforming to ANSI/AWWA C104/A21.4. A gasket conforming to ANSI/AWWA for each length of pipe and suitable for the type of joint of the pipe shall be furnished and shipped in a separate container.

   Push-on and mechanical joints shall conform to ANSI/AWWA C111/A21.11.

   Boltless restrained joints shall conform to ANSI/AWWA C111/A21.11. The restraint shall be an approved design which provides a positive lock against joint separation. Steel locking segments molded into a gasket to grip the pipe do not meet the requirements for this joint.

   Ball and socket joints are suited for underwater installations and may be used for other types of installations where an appreciable amount of joint deflection and a positive lock against joint separation are required.

   Fittings for ductile iron pipe shall be manufactured in accordance with ANSI/AWWA C110/A21.10 or ANSI/AWWA C153/A21.53, and ANSI/AWWA C111/A21.11. Fittings 406 mm (16-inch) or larger shall be manufactured of ductile iron only. Fittings shall be cement mortar lined in accordance with ANSI/AWWA C104/A21.4.

C. Polyethylene Pipe Materials: PE pipe and fittings shall conform to AWWA C901. The pressure class shall be 200 unless otherwise indicated on the plans. Material shall be furnished with plain ends and meet the requirements of DR9 IPS for potable waterlines.

D. Copper Tubing Materials: Copper service branches shall conform to ASTM B88M (B 88) Type K, and be assembled using flare-type compression fittings conforming in AWWA C800. Minimum working pressure for the branches shall be 1.0 MPa (150 psi). The material shall be either coil type (temper 060 annealed) or drawn type (temper H).
Fittings for copper service branches shall be high quality copper brass with AWWA C800 dimensions.

F. Brass Materials: Brass shall conform to ANSI B16.5 and ASTM B584.

2.3 FIRE HYDRANTS:
Fire hydrants shall be Mueller or approved equal, and shall conform strictly to AWWA C502, with the following changes or additions and supplementary details where applicable:

- Type of shut-off shall be compression.
- Inlet connection shall be 6" standard mechanical joint, complete with all joint accessories. Inlet valve shall have not less than a 5" opening.
- All hydrants shall be equipped with two 2-2" hose nozzles and one 4-2" steamer nozzle.
- The hydrant bury shall be 3-2" plus the diameter of the main to which it is connected, rounded to the nearest half foot or as shown on plans.
- A drain opening will be required and drain valves operating by springs or gravity is not acceptable.
- All fire hydrants shall open by turning to the left (counterclockwise).
- All fire hydrants shall be primed with a suitable rust inhibiting metal primer. After installation, hydrants shall be painted with two coats of bright red machinery enamel or color as indicated on plans.
- The body of the hydrant shall be equipped with a breakable flange, or breakable cast iron flange bolts just above the grade line.
- All hydrants shall be of such design as will permit their extension without excavating in case of future grade changes.
- The complete hydrant shall be of such design that when the hydrant barrel is broken through traffic collision, it may be replaced without excavating or breaking the pavement. The barrel and operating mechanism shall be so designed that in case of accident, damage or breaking of the hydrant above or near the grade level, the main valve will remain reasonably tight against leakage or flooding.
- All hydrant installations shall include a swivel coupling as may be necessary.
- Fire hydrants shall be located as shown on the plans or as directed by the ENGINEER and shall be set truly vertical at finish grade height with the base resting up on a stone or concrete slab four (4) inches thick approximately twenty-four (24) inches square. The base of the hydrant shall be surrounded by not less than five (5) cubic feet of clean crushed stone or gravel, size one (1) inch to two (2) inches. Pipe joints shall be made as specified for pipe laying. The hydrants shall be carefully and substantially blocked against firm trench walls with sound stone, sound slabs of old concrete or 2,000 psi concrete, but no additional pay will be allowed for same.
- Where required by local code requirements or as shown on the plan sheets, street reflectors indicating the presence of a fire hydrant shall be installed.
- All fire hydrants shall be painted in accordance with the local code requirements, manufacturer's specifications, and OWNER's requirements unless otherwise shown on the plan sheets.

2.4 SERVICE LINES:
The service lines shall be as follows: ¾" and 1" -- Type K Copper or HDPE Polyethylene 1-2" and larger -- Type K Copper, HDPE Polyethylene, or 200 psi PVC or other material as may be shown on the plans.

2.5 METER BOXES:

Meter boxes shall be as indicated on the plan sheets and approved by the ENGINEER or OWNER.

2.6 VALVES

A. Gate Valves: Gate valves shall be designed for a minimum water working pressure of not less than 150 psi. Valves shall be FIP, Flanged or MJ as required for the piping in which they are installed. Valves shall be resilient seat only. Gate valves shall have a clear waterway equal to the full nominal diameter of the valve, and shall be opened by turning counterclockwise. The operating nut (underground) or wheel (above ground) shall have an arrow, cast in the metal, indicating the direction of opening. Each valve shall have the maker's initials, pressure rating and a year of manufacture cast on the body. Prior to shipment from the factory, each valve shall be tested by hydraulic pressure equal to twice the specified hydrostatic working pressure. Valves two inches and larger shall be square operating nut, brass mounted, double disc, non-rising screw and shall conform to the requirements of the AWWA C515, or to Federal Specification WW-V-58, Class A. Smaller valves shall be brass or bronze, in accordance with Federal Specification WW-V-54. Gate valves shall be Mueller Mechanical Joint Resilient Seat Gate Valve Open Left or approved equivalent. Handwheel valves only allowed in above ground application.

All valves shall be installed as shown on the plans, and in accordance with the appropriate material specifications. For each gate valve, the CONTRACTOR shall furnish and install a valve box as shown on plans.

Valves shall be carefully handled and lowered into position in such a manner as to prevent damage to any parts of the valve. Gate valves shall be supported by a concrete block.

Valves shall be placed in such positions as indicated on the plans with the stem in a vertical position and securely held until all connections have been made.

Gate valves and pipefittings shall be set and jointed to new pipe in the manner described herein for cleaning, laying and jointing pipe. Mechanical joint valves will be installed unless specified otherwise.

B. Check Valves: Unless otherwise specified, all check valves for service taps will be the silent spring loaded double check type as approved by the ENGINEER or OWNER.

Water Distribution check valves shall be weight and lever type as manufactured by Watts, Mueller, Clow, or approved equal or as shown on plans.

C. Air Valves: Air valves shall be the float and lever type, or equal, or the vacuum breaker type, as is manufactured by the APCO No. 145C or approved equal or as shown on plans.

D. Miscellaneous Valves: Flush, blow-off, air relief and pressure-regulating valves shall be of types and sizes and at the location shown on the Plans. All valves and associated materials shall be of domestic origin. Pressure regulating valves shall be of the quality to provide the utmost protection for service lines. Air-relief and pressure regulating valves shall be Cla-Val or approved equal. Gate valves used on flush valve assemblies shall be Mueller FIP Resilient Seat Gate Valve, or approved equal.

2.7 VALVE BOXES

Valve boxes shall be 6" PVC, SDR-35 pipe complete with valve box mushroom lid, Tyler cast iron adjustable, or as shown on the Detail Sheet. Boxes shall be installed over each outside gate valve and shall rise to a height of 6" above natural ground at the valve location. Valve boxes shall be firmly supported and maintained centered and plumb over the wrench nut of the gate valve. The box cover shall be set flush with the surface of the ground or at such other level as may be directed. If valve is located in a ditch, the riser may need to be extended more than 6" above natural ground. Locations for these extended risers shall be designated by ENGINEER or OWNER. Valve box covers to have "W" imprinted on them. Signs to be placed at each valve box for each valve. However, only one valve sign is required per valve cluster. Valve boxes shall be installed where shown on the drawings and as directed by the ENGINEER. Valve boxes shall be centered on the valves. Where feasible, valves shall be located outside the limits of roads and streets. Earth fill shall be carefully tamped around each valve box to a distance of 4 feet on all sides of the box, or to the undisturbed trench face, if less than 4 feet.

2.8 VALVE EXTENSIONS

Valve extensions shall be placed on all valves greater than or equal to 5 feet below grade.

2.9 FITTINGS

Fittings 2" and larger shall be compact mechanical joint ductile iron with appropriate accessory sets to match the outside diameters of mainline piping. Fittings shall conform to ANSI/AWWA C153 and joints shall be in accordance with ANSI/AWWA C111/A21.11. The working pressure rating shall be 350 psi for all sizes of piping and fittings. Flanged fittings shall have full body dimensions and also be rated for a working pressure of 350 Psi. Underground fittings shall be asphalt coated outside in accordance with ANSI/AWWA C151. Above ground fittings shall be painted if shown on the Plans. Fittings shall have cement mortar lining inside in accordance with ANSI/AWWA C104. All coated fittings shall meet or exceed the requirements of NSF-61. Fittings shall be manufactured by Tyler or approved equal. Gaskets for mechanical joints shall conform to ANSI/AWWA C111. Gaskets for flanged joints shall be 1/8-inch-thick rubber, either ring or full face, conforming to dimensions in ANSI/AWWA C115. All accessory packs must match brand of fitting. Accessory packs shall be Tyler or approved equal.

Fittings, smaller than 2", shall be PVC or as shown on plans as manufactured by Harco or equal. Plastic fittings shall be joined by solvent weld.

All valves and fittings shall be restrained with Mega-Lug 2000 or Series 1100 Ford Uni-Flange Series 1500-S or equal style restraining devices as may be shown on plans or as approved by the ENGINEER at each connection point. Restraint for PVC pipe joined with standardized mechanical joint fittings shall be incorporated in the design of the follower gland and shall provide full circle contact and support of the pipe wall. Restraint shall be accomplished by a series of ring segments mechanically retained inside the gland housing and designed to grip the pipe wall in an even and uniform manner. Restraining ring segments shall be actuated by bolts featuring "Auto-Tork" twist off heads to ensure proper installation torque is applied. A safety stop on the Auto-Tork bolt shall limit the force applied to the ring segment against the pipe. All components of the restrainer, including the gland, bolts, and restraint segments shall be of high strength ductile iron, ASTM A536, Grade 65-45-12. The manufacturer of the retainer glands shall be registered to the International Standards Organization (ISO) for the 9001 standard (as a minimum) for quality. The saddles shall be listed in the Underwriters Laboratories Listing of Drinking Water System Components in Accordance with ANSI/NSF 60 & 61.

Bell and spigot joints for piping immediately upstream and downstream of fittings that are less than a full joint of pipe shall be restrained with Ford Uni-Flange Series 1390 or approved equal as may be required. Restraint devices for PVC pipe shall incorporate a series of machined serrations (not "as cast") on the inside diameter to provide positive restraint, exact fit, and 360° contact and support of the pipe wall. Restraint devices shall be manufactured of high strength ductile iron, ASTM A536, grade 65-45-12. Bolts and connecting hardware shall be manufactured of high strength, low alloy material in accordance with ANSI/AWWA C111. All restraint devices shall have a working pressure equivalent to the full rated pressure of the PVC pipe on which they are installed, with a minimum 2:1 safety factor when tested in a dead-end situation. Restraint devices shall meet or exceed the requirements of Uni-B 13-94 *Recommended Performance Specification for Joint Restraint Devices for Use with Polyvinyl Chloride Pipe*.

One-Bolt epoxy coated ductile iron with integral restrained joints fittings may be substituted for the conventional ductile iron fittings with external restraining devices if shown on plans or approved by OWNER/ENGINEER.

2.10 TRACER TAPE

The tracer tape shall be a minimum of 2" metallic tape detectable mesh for marking and detecting buried underground utilities if required.

2.11 TRACER WIRE

The tracer wire shall be designed specifically for the purpose of detecting buried utilities. Tracer wire shall be solid-core 12 AWG (minimum) copper wire coated with a 30-mil (minimum) polyethylene jacket designed specifically for buried use, or equal as approved by ENGINEER.

2.12 TEST STATION

The test station is designed specifically for the purpose of terminating tracer tape or tracer wire and shall have a minimum of two leads, Little Fink manufactured by COTT Manufacturing or equivalent approved by the ENGINEER Blue is the color of choice for waterlines.

2.12 TAPPING VALVES AND SLEEVES

Tapping valves shall be in accordance with Gate Valves of this specification. Ends shall be flanged by mechanical joint. Sleeves shall be cast iron and epoxy coated as manufactured by Smith-Blair or approved equivalent. Bolts shall be stainless steel.

2.13 INSULATION

All exposed piping, fittings, and valves shall be insulated with a pre-formed fiberglass insulation such as Johns-Manville=s Micro-Loc 650 with aluminum jacket or equal.

2.14 FLUSH VALVES AND HYDRANTS

Flush valves shall be as shown on plans. If designated, flush hydrants shall be installed and shall be Eclipse Post Hydrant #2 or equal with on 2-½" NST nozzle and 2" MJ inlet or as shown on plans.

2.15 VALVE, WATERLINE, TEST STATION MARKERS

A high visibility, flexible, durable white marker post, 4" x 66", with sharp blue contrasting color incorporating the international "no Dig" symbol and all weather decal WARNING WATER PIPELINE; Rhino 3-Rail or equivalent or as shown on plans.

2.16 COLD WATER METERS

The cold-water meters shall conform to AWWA C700. All meters shall be as shown on plans.

2.17 MISCELLANEOUS METER MATERIALS

A. Meter tapping Saddles: Service Saddles shall conform to AWWA C800. Saddles 1-½" through 8" shall be of the one-piece design style and have its top and bottom section hinged together with a silicon bronze pin. A slotted hex head screw (5/16" x 1-½" long for 1-½" through 8" Saddles) is used to tighten the upper and lower castings around the pipe (two screws for 1-½" & 2" taps). The saddle shall provide 360-degree support of the pipe, at least 2" wide. This specification is for 1-½" through 8" nominal pipe size saddles. The saddles shall conform to the Uni-Bell PVC Pipe Association and the American Water Works Association recommendations for saddles used on PVC pipe. The saddle shall be manufactured in the United States and submitted for listing in the Underwriters Laboratories Listing of Drinking Water System Components in Accordance with ANSI/NSF 60 & 61. Saddles shall be Ford or Mueller Series or approved equal.

B. Corporation Stop: The ¾" corporation stop shall have ¾" male iron pipe taper thread (MIPT) inlet by ¾" compression outlet connections and conform to AWWA C800, regarding thread types and diameters. The ¾" Corporation Stops shall be Ford or Mueller or approved equal.

Two-inch (2") Corporation Stops shall be of the ball valve type, meeting AWWA C800. The Inlet connection shall be 2" male iron pipe threads. All thread types and diameters shall conform to AWWA C800. Corporation Stop outlets will be supplied with 2" female iron pipe threads or copper compression as shown on plans. 2" Corp Stops shall be Ford or Mueller or approved equal.

C. Angle Stop Ball Valve: The ¾" angle stop shall have ¾" copper compression inlet by meter swivel nut outlet connections and conform to AWWA C800, regarding thread types and diameters. The valve shall be a substantial tee head for opening and closing with a 360-degre rotation of a standard slotted wrench and shall have padlock wings to lock the valve in the closed position. The manufacturer of the Angle Stops shall be registered to the ISO for the 9001 standard (as a minimum) for quality. The Angle Stop shall be manufactured in the United States and submitted for listing in the Underwriters Laboratories Listing of Drinking Water System Components in Accordance with ANSI/NSF 60 & 61. Angle Stop Ball Valves shall be Ford or Mueller or approved equal.

D. Meter Couplings: This specification covers Meter Couplings for 5/8" x ¾" meters. The service line connection shall be ¾" NPT, Male Iron Pipe. The meter coupling shall conform to AWWA C700, regarding thread types and diameters. The meter swivel nut shall rotate freely without

binding and shall be drilled with a hole for a seal wire. The manufacturer of the couplings shall be registered to the ISO for the 9001 standard (as a minimum) for quality. The Corporation Stop shall be manufactured in the United States and submitted for listing in the Underwriters Laboratories Listing of Drinking Water System Components in Accordance with ANSI/NSF 60 & 61. Couplings shall be Ford or Mueller or approved equal.

2.18 EXCAVATION MATERIALS

A. SELECT MATERIAL
Excavated material which is free of rocks, lumps, organic material, clods or debris which are larger than 6" in the largest dimension or other maximum size indicated on the plans, whichever is smaller.

B. GRANULAR MATERIAL (SAND)
Material which is free of detrimental quantities of clay, debris or organic material and which when tested by standard laboratory methods meets the following requirements:

Maximum liquid limit	45
Maximum plasticity index	15
Minimum plasticity index	4
Maximum percent passing No. 200 sieve	15
Minimum percent passing 3/4" sieve	100

The material shall be free flowing and when wet shall not adhere to form a ball when pressed in the hand.

C. CRUSHED STONE - STANDARD GRADATION
Crushed stone consisting of hard durable limestone or quartzite particles and meeting the following requirements:

Passing 2" sieve	100%
Passing 1½" sieve	95 - 100%
Passing ¾" sieve	35 - 70%
Passing 3/8" sieve	0 - 15%
Passing No. 4 sieve	0 - 5%
Passing No. 10 sieve	Less than 2%

D. CONCRETE
Conform to ASTM C94. The compressive strength of the concrete shall contain at least 2000 psi and shall contain at least four (4) sacks of cement per cubic yard.

PART 3 - EXECUTION

3.1. EXCAVATION
CONTRACTOR shall have certified excavation-competent operators, with a minimum five (5) years' experience, on job site at all times.

A. General: All excavation shall be unclassified and will not be measured or paid for as a separate bid item. The cost of excavation shall be included in the contract price for the related items of work in the Bid Proposal. Excavation shall include the removal of any trees, stumps, brush, debris or other obstacles that may obstruct the line of work, and the excavation and removal of all earth, rock or other materials to the extent necessary to install the pipe and appurtenances in conformance with the line and grades shown in Plans, or as specified. The CONTRACTOR shall keep the area free of spoil for a sufficient distance back from the edge of the excavation in order to avoid overloading and to prevent slides or caving. The excavated materials shall be kept trimmed in such a manner as to be of as little inconvenience as possible to the public and

adjoining property owners. At street crossings, sidewalks, and other places where the ENGINEER deems necessary, the trenches shall be bridged in a secure manner so as to prevent serious interruption of travel and to provide access to fire hydrants and public and private premises. Such bridging shall be approved by the ENGINEER.

B. TRENCH AND EXCAVATION SAFETY

1. After award, the CONTRACTOR shall submit to the OWNER six (6) sets of a trench excavation plan for record purposes. This excavation plan must be designed and sealed by a professional engineer registered in the State of Texas with professional experience in Soil Mechanics.
2. The CONTRACTOR is responsible for obtaining borings and soil analysis as required for plan design. The trench excavation plan shall be designed in conformance with OSHA standards and regulations.
3. No trenching in excess of 5 feet below existing grade will be allowed until this plan is reviewed. Any changes in the trench excavation plan after initiation of construction will not be cause for extension of time or change order and will require the same review process. The CONTRACTOR accepts sole responsibility for compliance with all applicable safety requirements.
4. The plan is for information and record purposes only.

C. Maximum and Minimum Width of Trenches: The sides of all trenches shall be cut as nearly vertical as possible. Unless otherwise specified on the Plans, the minimum width of trench in which the pipe may be installed shall not be less than 12" plus the outside diameter of the pipe, and the maximum width shall not be more than 20" plus the outside diameter of the pipe, measured at an elevation in the trench which is 12" above the top of the pipe when it is laid to grade.

D. Clearing: The entire work area shall be cleared of all trees, stumps, brush and other matter except for such trees and brush as may be designated by the ENGINEER or OWNER to be saved. Trees and brush designated to save shall be marked and trimmed and shall be protected from scarring and other damage during construction. Any cuts or scarring shall be painted with an acceptable pruning paint as approved by the ENGINEER.

E. Grubbing: All areas required for construction of structures, channels, embankments, or pavements shall have stumps and roots removed to a depth of a minimum of 2 feet below the excavated elevation.

F. Fencing: All fences which are interfered with during construction shall be removed, salvaged, reconstructed and/or replaced after completion of the work. Fences shall be replaced or repaired to an equal or better condition than original. Temporary fences shall be placed and removed where livestock or security is required at the CONTRACTORS expense and at the direction of the ENGINEER or OWNER.

G. Dewatering Excavations: The CONTRACTOR shall immediately remove all surface or seepage water from sewers, drains, ditches, and other sources which may accumulate during the excavation and the construction work, by providing the necessary under-drains or otherwise, and by doing he necessary pumping, bailing or draining. The CONTRACTOR shall have available at all times sufficient pumping equipment in proper working order for doing the work herein required. All water removed from excavations shall be disposed of in an approved manner, so as not to create unsanitary conditions, nor to cause injury or damage to persons or property, or damage to the work in progress, nor to interfere unduly with the use of streets, private driveways or entrances. Pumping, bailing and draining, under-drains, and ditches shall be considered as incidental work and will not be paid for as separate items, but their cost shall be included in such contract prices as are provided in the contract.

H. Shoring: Trenches shall be sheeted, braced or shored to the extent necessary to maintain sides of the trench in a safe manner. Excavations, trenching and shoring shall be in accordance with Subpart P, Construction Industry, OSHA Safety and Health Standards or other applicable standards.

I. Subgrade in Natural Soil: Where a firm and stable foundation for the pipe can be obtained in a natural soil and where special embedment is not specified or shown on the plans, the bottom of the trench shall be carefully and accurately trimmed to fit the lower portion of the pipe barrel. Should the excavation be carried below grade, except where specified, the CONTRACTOR shall at his own expense refill the trench to the proper grade with selected backfill material approved by the ENGINEER. The backfill material shall then be compacted by methods approved by the ENGINEER.

J. Subgrade in Rock: If the bottom of the excavation for the waterline is found to be in rock or other hard material that cannot be excavated to a true sub-grade and shaped to provide uniform bearing for the pipe barrel, the rock or other material shall be removed to a depth not less than three inches below sub-grade and the bottom of the trench brought to true sub-grade elevations by filling with pea gravel or suitable rock cuttings and shavings from the excavation and compacting by means of tamping until a firm and uniformly unyielding foundation is obtained, as specified by the ENGINEER. No extra payment will be made for this work unless specified elsewhere herein.

K. Soft Subgrade: Where soft or sponge material is encountered in excavation at subgrade level to the degree that a firm foundation cannot be obtained for the pipe line, the unsuitable materials shall be removed upon direction of the ENGINEER to such a depth that by replacing the unsuitable material with sand or gravel a firm and stable foundation can be secured. No extra payment will be made for this work unless specified elsewhere herein.

L. Disposal of Excavated Materials: Suitable excavated materials shall be piled adjacent to the work to be used for backfilling. Excavated materials unsuitable for the backfilling, or in excess of that required for backfilling, shall be disposed of by the CONTRACTOR at locations designated on the Plans or approved by the ENGINEER. Desirable top soil, sod, etc., shall be carefully piled separately and replaced in its original position when required. Excavated materials shall be handled at all times in such a manner as to minimize the inconvenience to public travel and to permit safe and convenient access to private and public property adjacent to or along the line or work. In parkways and easements where it is necessary to deposit excavated materials on lawns or other green areas during the work, burlap or similar materials shall be placed on the lawn to prevent contact between excavated materials and the lawn. No extra payment will be made for this work unless specified elsewhere herein.

M. Private Road Crossings: Where the waterline crosses private or farm roads the CONTRACTOR shall conduct his work so as to cause the least inconvenience to the property OWNER involved and upon completion of backfilling shall restore the road to a condition as good as, or better than, that in which it was originally, as determined by the ENGINEER. Replacement will be of the same type and quality as the original surface as shown on the Plans or as specified below.

N. Street, Roadway and Railroad Crossing Excavation: Where the waterline crosses a street, roadway, driveway, highway or railroad the method of excavation shall meet the requirements set forth herein and as shown on the Plans. Public Street, roadway, railroad crossings shall be bored regardless of pavement type, unless clearly designated as open cut on the Plans.

1. Open Cut Where open cuts are allowed through roadways the side of the trench shall be kept as nearly vertical as possible and, where necessary, shall be sheeted and braced to prevent caving. The trenches shall be backfilled as shown on the Plans and compacted to 95% Standard Proctor. The pavement replacement shall be of the same type and quality as the original surface as shown on the Plans or as specified below.

   PAVED ROADWAYS will not be open cut, unless specifically noted on the Plans. In all cases when open cuts are allowed through pavements, the methods of construction must meet the requirements of the appropriate agency in all respects, superceding these requirements and those shown on the Plans.

2. Boring, Jacking or Drilling: Where indicated on the Plans and/or as directed, the pipe will be pushed or jacked under roadways; or the pipe will be installed in a casing that has been placed under the roadway by boring, jacking or drilling. Casing shall be steel (0.25 minimum wall thickness), or as indicated on plans. Casing shall have casing spacers and molded end seals (Maloney Type or Equal), where indicated on plans. Spacers shall be

appropriate for the weight of the carrier pipe and shall be spaced along the pipe as recommended by the manufacturer. In the absence of such guidelines, three spacers shall be equally spaced on each pipe joint for all pipe sizes. Molded rubber casing end seals shall be installed using stainless steel bands on both the carrier pipe as well as the casing. Overlapping, adhesive-type end seals are not acceptable.

a) Bores and Encasement Description: Work under this item shall consist of furnishings all materials, equipment and labor for installing complete Street Bore, Highway Bore, or Railroad Bore and Encasement where required.

The OWNER will obtain a permit from the City, County, Texas Department of Transportation and/or the railroad company for these crossings. The CONTRACTOR will be required to abide by the terms of these permits. This will include the CONTRACTOR giving proper notice of the time he expects to begin work on each crossing, to the proper railroad or highway official at the appropriate time.

Materials: Encasement pipe shall be heavy weight steel pipe of sufficient size to permit passage of carrier pipe. The minimum length of encasement pipe shall be determined as indicated on the plans. The encasement pipe shall be tightly jointed to prevent leakage. The ends of the pipe shall be plugged with clay core to prevent entrance of excessive ground water.

Carrier pipe shall be of the size and class shown on the plans.

Construction: The encasement shall be installed with even bearing throughout its length and all voids between earth and encasement pipe shall be filled with grout or other methods approved by the ENGINEER. Any settlement or damage to highway caused by boring and encasement operations will be the CONTRACTOR's responsibility and his own expense.

For boring the CONTRACTOR will be permitted a tolerance from exact grade or alignment of 1" per 100 feet.

All excavations within the right-of-way and not under surfacing shall be backfilled by tamping in 6" horizontal layers or by ponding. All surplus material shall be removed from the right-of-way and the excavation finished flush with surrounding natural ground.

Where sodding is disturbed by excavation or backfilling operations, such areas shall be replaced by mulch sodding on all slopes of 2% or less. All slopes over 2% shall be replaced by block sodding.

Highway crossing under surfaced roads and under surfaced cross roads and surfaced driveways within the right-of-way shall be placed by boring.

Operations along highways shall be performed in such manner that all excavation material be kept off the pavements at all times, as well as all operating equipment.

Barricades and warning signs and flagmen when necessary shall be provided by the CONTRACTOR or OWNER.

b) Driveway Bore Description: Work under this item shall consist of furnishing all materials, equipment, labor and incidentals for installing a complete driveway bore.

Materials: The proposed crossing or bore shall not require encasement pipe unless shown on plans. The carrier pipe shall be of the type and class as called for on the Plans.

Construction: Carrier shall be installed by boring. All voids between carrier pipe and the bored hole shall be filled with grout, soil cement, or other materials approved by the ENGINEER.

Carrier pipe joints shall be so arranged that the middle of the carrier pipe, when installed, shall be directly in line with the centerline of the driveway.

Any chipping or other damage of the concrete driveway being bored shall be repaired to its original condition all at the CONTRACTORS expense.

3. Street and Drive Repair Description:

This item shall govern the repair of streets or driveway pavement which has been damaged by the construction of underground utilities.

Excavation and Backfilling: The CONTRACTOR shall excavate the trench with every effort made to keep the trench width to a minimum. Asphalt and oil pavement cuts shall be made in a neat and workmanlike manner and concrete pavement shall be saw-cut unless otherwise approved by the ENGINEER.

After the pipe has been laid and bedded, the trench shall be backfilled with select material free from rock, large lumps, or other unsuitable material. The backfill material shall be placed in layers not exceeding 4" of thickness and shall be tamped on both sides of the pipe. Mechanical tamping will not be allowed until there is a minimum of 12" of soil covering the pipe. The backfill shall be completely tamped from bottom to top and shall have a minimum of 95% Mod ASTM 1557 density.

Pavement Patch: Street and driveway pavements shall be replaced as shown on the plans for the particular type of pavement.

The pavement patch is to be constructed in a neat and workman like manner, and the CONTRACTOR shall make every effort to provide a smooth riding surface.

O. Use of Explosives: Unless prior written permission is received from the ENGINEER and OWNER, no blasting will be allowed on this project. Bonds may be required from the blaster prior to receiving such permission. If approved, the CONTRACTOR shall advise the ENGINEER and OWNER regarding the scheduling of such work. Should the CONTRACTOR elect to use explosives in the performance of the work, they shall be used with utmost precaution, and no blasting shall be done within one hundred (100) feet of the completed work or exposed pipes, conduits, and other related materials, and the CONTRACTOR shall assume all liability for any injury or damage to persons or property resulting from such usage. Only a sufficient quantity of explosives for the immediate day's work shall be kept on hand by the CONTRACTOR. Caps, exploders, and explosives shall be stored separately. The CONTRACTOR shall be responsible for, and shall make good any damage caused by blasting or accidental explosion.

P. Depth of Trench: All piping and associated appurtenances shall have a minimum cover 36" or as shown on plans. Depth of excavation should not exceed 60", unless required by significant grade changes. The CONTRACTOR is responsible for providing an OSHA-approved trench safety system in the event that the excavation depth exceeds 60". See Section 1002 for trench excavation safety systems.

Q. Pipe Laying:

1. Pipe Handling: Pipe shall be handled in such a manner as will prevent damage to the pipe, pipe lining or coating. Pipe and fittings shall be loaded, unloaded, and placed using hoists and slings in a manner so as to avoid shock or damage. Under no circumstances shall they be dropped or skidded, or rolled against other pipe.
2. Pipe Cutting: Whenever it becomes necessary to cut a length of pipe, pipe ends shall be square with the longitudinal axis of the pipe and otherwise smoothed so that good connections can be made. Pipe shall be cut by cutters recommended by the manufacturer. Ductile iron pipe shall not be cut by oxyacetylene torch. Field-cut pipe lengths shall be filed or ground to obtain a chamfer on the outside of the pipe, according to the manufacturer's recommendations. Rough or sharp edges shall be removed from the cut end.
3. Pipe Laying: Pipe and fittings shall be clean when laid. Precautions shall be taken to prevent floating. The pipe shall be placed on the trench bottom or bedding. After the pipe has been aligned, jointed, and thrust blocking placed, the pipe shall be secured in place with approved backfill material. At times when pipe laying is not in progress, the open ends of the pipe shall be closed by a watertight plug.
4. Pipe Laying on Curves: If the pipe is shown curved in the plans, the curves shall be accomplished by special fittings or by deflecting the joints in accordance with the manufacturer's recommendations. Joint deflections shall not be permitted at valves.

When rubber-gasketed pipe is laid on a curve, the pipe shall be jointed in a straight alignment and then deflected to the curved alignment. Trenches shall be made wider on curves for this purpose.

5. Pipe Laying where earth grading is necessary: Where a pipe is to be placed within an embankment or the top of the pipe is above the existing ground, the embankment shall be constructed to at least 150 mm (6 inches) above the top of the pipe before trenching for the pipe. The trench shall then be excavated to the minimum width necessary for the proper placing and backfilling of the pipe.
6. Tracer Tape: Tracer tape shall be installed over copper and non-metallic water lines including service lines **only if shown on plans**. The tracer tape shall be placed approximately 0.3 m (1 foot) above the top of the line and shall extend its full length. Tracer tape shall be a detectable type and shall be marked "WATER". Tracer tape shall also be brought up at distances not to exceed 1,000 feet in test stations as shown on Detail Sheet. After installation, tracer tape shall be spot-tested to ensure continuity.
7 Tracer Wire: Tracer wire shall be installed in the same trench with nonmetallic pipe during pipe installation. The tracer wire shall be designed specifically for the purpose of detecting buried utilities. It shall be taped with vinyl electric tape to the pipe at a minimum of 3 locations per joint (not to exceed 6-½ foot spacing) or as required by ENGINEER or INSPECTOR to insure that the wire remains on top of pipe. The tracer wire shall be securely bonded together at all wire joints with waterproof, jelly-filled wire nut splice connectors to provide electrical continuity. Tracer wire shall also be brought up at distances not to exceed 1,000 feet in test stations as shown on Detail Sheet. After installation, tracer wire shall be spot-tested to ensure continuity.
8 Test Stations: Test stations shall be installed at approximately 1,000' intervals next to a physical barrier i.e. utility pole, fence line, tree, etc. to provide physical security for the test station.
9. Valve and Test Station Markers: shall be installed next to the item to identify physical location of and provide security. Waterline markers shall be installed at property/fence lines and road crossings.
10. Blocking and Wedging: Fire hydrants, valves and fittings shall be laid on concrete blocks and held in position by hardwood wedges. Blocks shall be bedded firmly in the bottom of the trench with uniform bearing and with the long dimension of the block perpendicular to the pipe barrel. Blocks shall be level across the trench and the proper number of blocks placed one upon the other to bring the fittings to the required grade for jointing.
11. Thrust blocking: Plugs, caps, tees, hydrants, and elbows or bends having a deflection of 11 1/4 degree or greater shall be provided with concrete thrust blocking. The blocking shall be TxDOT Class B concrete placed between firm original undisturbed earth and the fitting to be anchored. The concrete thrust blocking shall be placed and shaped in a manner satisfactory to the ENGINEER with the thrust force contained by the blocking. The blocking placement shall allow for pipe and joint accessibility or repair.
12. Restrained joints and fittings: In addition to thrust blocking, valves and fittings shall be restrained by approved joint restraint devices. Bell and spigot joints for piping immediately upstream and downstream of fittings that are less than a full joint of pipe shall be restrained with Ford Uni-Flange Series 1390 or approved equal as may be required. The devices shall be protected against corrosion by protective coatings or the application of an asphaltic coating. If polyethylene encasement is specified, the encasement shall cover the entire assembly. Restraining devices may be used in lieu of concrete thrust blocking only when approved by the ENGINEER.

3.2 BACKFILLING

No backfilling shall occur until the OWNER or ENGINEER has approved the installation.

Backfilling shall include the refilling and consolidating of the fill in trenches and excavations up to the surrounding ground surface or road grade at crossings.

Backfilling shall be done with good earth, sand or gravel as shown on plans and shall be free from large rocks or hard lumpy materials unless the rocks or lumps are not more than approximately 4" in greatest diameter and are scattered in the spoil. No material of a perishable, spongy, or otherwise deleterious nature shall be used in backfilling. If rock is encountered, sand bedding free of lumpy clay shall be used around piping. See Detail Sheet for sand bedding.

Excavated material, which is suitable for backfilling, and excess material shall be disposed of in a manner approved by the ENGINEER. Except in cultivated fields, surplus spoil may be neatly distributed and spread on the right-of-way, which shall be left in a clean and sightly condition.

Where construction enters the limits of State or County rights-of-way, the CONTRACTOR shall comply with the special requirements of those agencies with respect to backfilling.

A. Embedment: Work under this item shall be installed as per the plans and specifications around all pipes except where otherwise noted. Granular embedment material shall be free flowing sandy or gravel material which contains no clay and is free of organic material. The material shall be approved by the ENGINEER.

B. Borrow: Where sufficient fill and backfill materials are not available in such quantity as necessary to properly backfill, borrow material shall be provided by the CONTRACTOR at his expense and shall be approved by the ENGINEER.

C. Testing: Tests may be required by the ENGINEER for backfill or embedment density. Initial tests shall be at the expense of the OWNER. In the event of a test failure CONTRACTOR shall be responsible for additional costs associated with additional testing.

3.3 BLOCKING TRAFFIC AND BARRICADES

The CONTRACTOR will not be allowed to completely block traffic on any major thoroughfare or dead end street, and shall keep inconvenience to the public to a minimum. It shall be the CONTRACTORS responsibility to provide any signs, barricades, or lights needed to warn the public about construction, or obstructions on the road, and to inform the Owner of his approximate schedule of construction.

3.4 TESTS FOR WATER LINES

A. Hydrostatic Pressure Test: After the pipe is laid, the joints completed, and the trench backfilled.

1. Description:

a. This section specifies hydrostatic testing all pipes having a pressure rating more than 20 psi. All testing shall conform to the latest TCEQ Water Distribution System General Construction Notes, as included with these plans.

b. Test waterlines in sections so that the maximum pressure at the lowest point in the section being tested does not exceed 120 percent at the nominal pressure rating of the pipe and the minimum pressure at the highest point in the section being tested is at least 80 percent of the pressure rating. The nominal pressure rating for all potable water systems is not less than 150 psi. Permission to vary from these pressure ratings shall be obtained from the ENGINEER.

2. Leakage Allowance:

$$Q = \frac{\mathrm{LD}\sqrt{P}}{148{,}000}$$

Where:

- Q = the quantity of makeup water in gallons per hour,
- L = the length of the pipe section being tested, in feet,
- D = the nominal diameter of the pipe, in inches, and
- P = the average test pressure during the hydrostatic test in pounds per square inch.

3. By Contractor:

Furnish pump, pipe connection and all necessary apparatus including gages and meters to allow continuous pumping at specified constant pressure for duration of test. Also, provide all test plugs required to test the line. CONTRACTOR is responsible for costs associated with all bacteriological tests.

4. By Owner:
   The OWNER will furnish water for filling lines and any 3rd party tests (except bacteriological tests) through existing mains or fire hydrants the first time. Subsequent fillings and tests shall be at the expense of the CONTRACTOR.
5. Test Procedure:
   a. Slowly fill the piping system with water and supply the specified test pressure by means of a pump connected to the pipe in a satisfactory manner.
   b. Before applying the specified test pressure, expel all air from the pipe. To accomplish this, make taps, if necessary, at the points of highest elevation and afterwards tightly plug them.
   c. The duration of each pressure test shall be a minimum of four hours after the line has been brought up to test pressure. Maintain pressure within the limits specified in paragraph 1.b. Continue all pressure tests until the ENGINEER is satisfied that the waterline meets the requirements of these specifications.
   d. At intervals during the test, inspect the entire route of the waterline to find any leaks or breaks. Remove and replace any defective joints, cracked or defective pipe, fittings or valves discovered in consequence of this pressure test with sound material in the manner provided, and repeat the test until satisfactory results are obtained.
   e. Should any test of pipe in place show greater leakage than that specified, the CONTRACTOR shall at own expense, find and repair the defective joints until the leakage is within the specified allowance.
   f. Bear the cost of purchasing water for refilling the line should any section of line fail to pass the pressure test.

B. Removal of Air: In the event air is admitted to the waterline after being expelled for the hydrostatic tests, such air shall be removed prior to completion of the system and acceptance by the OWNER. In no case shall the system be placed in operation prior to the removal of the air.

C. Disinfection of Water Mains:
1. Description:
   a. This section specifies the procedure for disinfection of the potable water system, and overall conforms to AWWA C651, Disinfecting Water Mains.
   b. During the construction operations, workers shall be required to use utmost care to see that parts of the structures, inside pipes, fittings, jointing materials, valves, etc., the surface of which contact potable water, are maintained in a sanitary condition.
   c. Every effort must be made to keep the inside of the pipe, fittings, and valves free of all foreign matter, sticks, dirt, rocks, etc. As each joint of pipe is being laid, it must be effectively swabbed so that all foreign matter is removed. Placing dry powdered chlorine in the waterline will not be permitted. All fittings and exposed open ends of pipe must be blocked or capped until the line is completed.
   d. Disinfection of the line or any section thereof shall not be commenced until the ENGINEER review of the method, apparatus, disinfecting agent and the section of the line has been obtained.
2. Chlorine (Cl_2): Seventy (70) percent calcium hypochlorite or equal.
3. Disinfection Procedure:
   When the entire waterline or certain selected sections thereof have been completed, tested and made ready for turning over to the OWNER, ready for use, the line or section of line shall be thoroughly disinfected according to the following procedure:
   a. The CONTRACTOR shall provide all necessary taps to complete this section of the specifications.
   b. The line shall be flushed out, completely replacing its entire volume with water furnished by the OWNER.

c. Chlorine will be injected into the section of line being disinfected so that its entire capacity will be filled with water containing chlorine with at least 50 ppm or other concentration determined by the ENGINEER. The disinfecting agent shall be introduced at one end of the section and the water released from the opposite end until the disinfecting agent is present at the discharge end in such quantity as to indicate a residual chlorine of more than 50 ppm or as otherwise determined by the ENGINEER. All valves shall be closed and the disinfecting solution permitted to remain in the waterline section for not less than twenty-four (24) hours.

4. Flushing and Testing:
   a. At the end of the disinfecting period, the disinfecting solution shall be discharged from the pipe and replaced with water furnished by the OWNER. Meet T.C.E.Q. requirements regarding discharge of chlorinated water.
   b. Take a sample of water from the disinfected main (not through a fire hydrant) from a suitable tap under the supervision of the ENGINEER or his inspector and submit to an approved testing laboratory of the T.C.E.Q for analysis.
   c. A minimum of one sample for each 1,000 feet of completed waterline will be required or at the next available sampling point beyond 1,000 feet as designated by the design ENGINEER. Bacteriological samples shall be taken to a lab that is approved by the OWNER or ENGINEER.
   d. If the test shows a satisfactory quality of water, the disinfected pipe shall then be placed in service by the CONTRACTOR who shall notify the ENGINEER and assist the ENGINEER in location and operation of all valves installed by the CONTRACTOR.
   e. If the sample shows unsatisfactory quality of water, the process of disinfection shall be repeated until a satisfactory water sample is obtained. The CONTRACTOR shall furnish to the OWNER, a certified copy of the laboratory report of satisfactory disinfection of the main.
   f. All water used by the CONTRACTOR to disinfect water mains beyond the first test shall be purchased from the OWNER. The CONTRACTOR shall bear all costs of disinfecting. The CONTRACTOR shall also bear all costs of retesting.

3.5 FINAL CLEAN UP

Upon completion of the installation of the water lines, distribution systems, and appurtenances, all debris, including PVC scraps resulting from trenching through abandoned distribution system piping, shall be removed from work areas as disposed of by the CONTRACTOR. In addition, all above ground structures of abandoned valve clusters shall be removed and disposed of by CONTRACTOR. Reusable valve signs, risers, riser tops and mushroom lids in locations of abandoned valve clusters shall be given to OWNER. Scraps shall not be buried on private, county, or state properties. This does not relieve the CONTRACTOR of the responsibility of ongoing and routine clean-up operations related to the line laying work. All surplus excavated materials resulting from the work shall be removed from the site or spread on site as directed by ENGINEER / OWNER / STATE / COUNTY. Excess materials shall be mounded along trench lines in order to channel water away from fresh pipe trenches. Excess materials in areas of steep grades shall be utilized to channel water away from trench lines and constructing terracing berms to prevent erosion. ALL disturbed areas shall be seeded according to the Seeding Rate Section of this Specifications Book and fertilized at 200 pounds per acre with 13-13-13. The costs associated with seeding and final clean up shall be included in the line item bid prices of the CONTRACTOR.

END OF SECTION

(This page is intentionally left blank)

SECTION 906
GATE VALVES

PART 1 - GENERAL

1.1 DESCRIPTION

A. This section describes the manufacture and installation of gate valves 4 inches and larger for use in water service.

B. Related Work Specified Elsewhere.
   1. Section 205 – Water Line Installation

1.2 SUBMITTALS

Submit catalogue cuts and detail prints on all valves furnished indicating materials of construction and construction details.

PART 2 - PRODUCTS

2.1 GENERAL

A. All valves shall be iron body. bronze mounted, nonrising stem, internal wedging type. All valves shall be new. Valves shall have a pressure rating of at least 150 psi unless otherwise noted.

B. All gate valves in sizes 4" through 16" shall conform to AWWA C-509 except as modified herein.

C. All gate valves larger than 16" shall conform to AWWA C-500 except as modified herein.

2.2 ENDS

A. Valves shall be FIP, Flanged or MJ as required for the piping in which they are installed or as indicated on the plans. Valves shall be resilient seat only. Mechanical joint ends shall conform to AWWAC-111 (ASAA-21.11).

B. Bolt and nuts for mechanical joints will be of a high-strength low-alloy corrosion resistant steel and conform to AWWA C-ill. All mechanical joint glands will be cast iron.

2.3 RESILIENT SEATED VALVES

A. Seat
   The seat shall be made of Styrene Butadiene rubber and provide a positive water tight seal. The seat shall be permanently bonded or mechanically attached to the wedge with stainless steel screws. If bonded, ASTM P-429 requirements shall be followed.

B. Body and Castings
   Cast iron body shall be of iron with an even grain and shall possess a tensile strength of not less than 32,000 pounds per square inch. All bronze castings, except the stem, shall have a tensile strength of not less than 30,000 pounds per square inch. The entire internal valve body surfaces shall be coated with a factory applied 2-component epoxy system or approved equal. The seating surface shall be machined or otherwise constructed to provide a smooth, even surface for the resilient seat. All valves shall open to the left (counterclockwise) and have a 2" square wrench nut unless specified otherwise.

C. Stems
   Gate valve stems, 4" through 12", shall be fabricated from solid bronze rod and 16" and larger shall have a cast copper alloy, having a tensile strength of not less than 60,000 pounds per square inch, and a minimum yield strength of 30,000 pounds per square inch, meeting ASTM B-98 standards.

2.4 STUFFING BOXES

A. All valves two (2") inches through sixteen (16') inches shall be equipped with double 0-rings, provided arrangement is made for replacement under pressure of the upper 0-ring when the valve is fully open. The thrust collar shall work in an "0" ring Sal lubricant reservoir or against bearings or washers, above and below, constructed of Delrin or approved equal material. All geared valves will be equipped with conventional packing in the main stuffing box.

B. All horizontal valves will have attached stuffing boxes according to the above AWWA Specification.

C. Stuffing box bolts and nuts for buried valves shall be stainless steel.

2.5 BOLTING AND GLANDS

A. All bolting that will be in direct contact with the earth or water shall be Everdur bronze or stainless steel. Included, but not necessarily limited to, are the following:

1. Bonnet bolts.
2. Gland bolts and nuts.
3. Bolts and nuts on any valve accessory.

B. Gland flanges or followers that are a separate part may be cast iron or bronze.

C. Glands for valves more than twelve (12") inches in diameter shall be solid bronze or cast iron bronze bushed.

2.6 TAPPING VALVES

Tapping valves shall to all requirements of this section with the following exceptions:

A. Tapping valves shall have oversize seat rings or permit entry of standard tapping machine cutters.

B. In the open position, valve gates shall be clear of the ports, so that the cutter shall pass through without making contact with the gates.

C. Valves shall have an inlet flange conforming to AWWA Standard C 10, Class 125, with a machined projection or recess to mate with tapping sleeve outlet flange to assure correct alignment.

D. Valve shall have standard mechanical joint outlet and shall fit any standard tapping sleeve.

2.7 OPERATING NUTS

A. All valves shall be nut operated unless otherwise noted.

B. All valves shall open by turning to the left.

2.8 MISCELLANEOUS REQUIREMENTS

A. The valves more than sixteen (16") inches in diameter shall be designed for horizontal installation in a horizontal pipeline unless otherwise called for. All other valves are to be vertical.

B. Valves fourteen (14") inches and larger ordered for installation in a vertical pipeline shall be equipped with bronze shoes and slides.

C. A factory hydrostatic test of gate valves is not required.

D. All underground valves shall be furnished with operator shaft extensions if the operating nut is greater than four feet below finished grade. Shaft extensions shall be stainless steel or cast iron with stainless steel hardware. Shaft extensions shall be of such length to bring the operating nut to within two (2") inches of top of the valve box.

E. Bypass valves are required on alt valves larger than sixteen inches in diameter. Bypass valves shall be at least one twelfth of the diameter of the main valve.

2.9 VALVE BOXES

A. Valve boxes shall be three (3) piece cast iron and shall be similar to Mueller No. H-10360 or an approved equal. The three (3) pieces shall consist of the top section, bottom section and cover. DR 35 PVC pipe extensions shall be provided as required.

B. For fourteen (14") inch and sixteen (16") inch valves Mueller No. H-I 0357 with No. 160 base or equal shall be furnished and installed. For eighteen (18") inches and larger valves, manholes five (5') feet in diameter will be required.

PART 3 - EXECUTION

3.1 INSTALLATION

A. Handle valves carefully to prevent damage to any parts of the valve. Lower valves in the trench using chains and a hoisting device.

B. Place valves in position with stems in a vertical position and secure the valve until all connections have been made. Set all valves ten (10") inches and larger on a concrete slab and brace each side with 2000 psi concrete. Do not cover the joint or any bolt or operating nut with concrete.

C. Install valve boxes plumb over the wrench nut of the valve and firmly support the box against movement during backfilling operations. Install extensions as required.

D. Check each valve to insure that a standard valve wrench will easily slip over the operating nut and operate the valve. Valve installations will be rejected if the above condition cannot be met or if the valve box has mud, rocks or construction debris in it.

E. Construct a concrete collar around the outside of the valve box as shown on the plans.

3.2 TAPPING VALVES

A. Tapping valves and the tapping machine shall be connected to the tapping sleeve and bolts tightened to the manufacturers recommended torque.

B. Before cuffing the pipe, test the tapping sleeve and valve for leakage using compressed air. The test pressure shall not be less than 100 psi. Check the entire assembly for leaks using a soap solution.

C. Tap the pipe according to the tapping machine manufacturer's recommendations, removing the coupon.

END OF SECTION

(This page is intentionally left blank)

TCEQ WATER DISTRIBUTION SYSTEM GENERAL CONSTRUCTION NOTES

1. This water distribution system must be constructed in accordance with the current Texas Commission on Environmental Quality (TCEQ) Rules and Regulations for Public Water Systems 30 Texas Administrative Code (TAC) Chapter 290 Subchapter D. When conflicts are noted with local standards, the more stringent requirement shall be applied. At a minimum, construction for public water systems must always meet TCEQ's "Rules and Regulations for Public Water Systems."

2. All newly installed pipes and related products must conform to American National Standards Institute (ANSI)/NSF International Standard 61 and must be certified by an organization accredited by ANSI [§290.44(a)(1)].

3. Plastic pipe for use in public water systems must bear the NSF International Seal of Approval (NSF-pw) and have an ASTM design pressure rating of at least 150 psi or a standard dimension ratio of 26 or less [§290.44(a)(2)].

4. No pipe which has been used for any purpose other than the conveyance of drinking water shall be accepted or relocated for use in any public drinking water supply [§290.44(a)(3)].

5. All water line crossings of wastewater mains shall be perpendicular [§290.44(e)(4)(B)].

6. Water transmission and distribution lines shall be installed in accordance with the manufacturer's instructions. However, the top of the water line must be located below the frost line and in no case shall the top of the water line be less than 24 inches below ground surface [§290.44(a)(4)].

7. The maximum allowable lead content of pipes, pipe fittings, plumbing fittings, and fixtures is 0.25 percent [§290.44(b)].

8. The contractor shall install appropriate air release devices with vent openings to the atmosphere covered with 16-mesh or finer, corrosion resistant screening material or an acceptable equivalent [§290.44(d)(1)].

9. The contractor shall not place the pipe in water or where it can be flooded with water or sewage during its storage or installation [§290.44(f)(1)].

10. When waterlines are laid under any flowing or intermittent stream or semi-permanent body of water the waterline shall be installed in a separate watertight pipe encasement. Valves must be provided on each side of the crossing with facilities to allow the underwater portion of the system to be isolated and tested [§290.44(f)(2)].

11. Pursuant to 30 TAC §290.44(a)(5), the hydrostatic leakage rate shall not exceed the amount allowed or recommended by the most current AWWA formulas for PVC pipe, cast iron and ductile iron pipe. Include the formulas in the notes on the plans.

- The hydrostatic leakage rate for polyvinyl chloride (PVC) pipe and appurtenances shall not exceed the amount allowed or recommended by formulas in America Water Works Association (AWWA) C-605 as required in 30 TAC §290.44(a)(5). Please ensure that the formula for this calculation is correct and most current formula is in use;

$$Q = \frac{LD\sqrt{P}}{148{,}000}$$

  Where:

  - Q = the quantity of makeup water in gallons per hour,
  - L = the length of the pipe section being tested, in feet,
  - D = the nominal diameter of the pipe in inches, and
  - P = the average test pressure during the hydrostatic test in pounds per square inch (psi).

- The hydrostatic leakage rate for ductile iron (DI) pipe and appurtenances shall not exceed the amount allowed or recommended by formulas in America Water Works Association (AWWA) C-600 as required in 30 TAC §290.44(a)(5). Please ensure that the formula for this calculation is correct and most current formula is in use;

$$L = \frac{SD\sqrt{P}}{148{,}000}$$

  Where:

  - L = the quantity of makeup water in gallons per hour,
  - S = the length of the pipe section being tested, in feet,
  - D = the nominal diameter of the pipe in inches, and
  - P = the average test pressure during the hydrostatic test in pounds per square inch (psi).

12. The contractor shall maintain a minimum separation distance in all directions of nine feet between the proposed waterline and wastewater collection facilities including manholes. If this distance cannot be maintained, the contractor must immediately notify the project engineer for further direction. Separation distances, installation methods, and materials utilized must meet §290.44(e)(1)-(4).

13. The separation distance from a potable waterline to a wastewater main or lateral manhole or cleanout shall be a minimum of nine feet. Where the nine-foot separation distance cannot be achieved, the potable waterline shall be encased in a joint of at least 150 psi pressure class pipe at least 18 feet long and two nominal sizes larger than the new conveyance. The space around the carrier pipe shall be supported at five-foot intervals with spacers or be filled to the springline with washed sand. The encasement pipe shall be centered on the crossing and both ends sealed with cement grout or manufactured sealant [§290.44(e)(5)].

14. Fire hydrants shall not be installed within nine feet vertically or horizontally of any wastewater line, wastewater lateral, or wastewater service line regardless of construction [§290.44(e)(6)].

15. Suction mains to pumping equipment shall not cross wastewater mains, wastewater laterals, or wastewater service lines. Raw water supply lines shall not be installed within five feet of any tile or concrete wastewater main, wastewater lateral, or wastewater service line [§290.44(e)(7)].

16. Waterlines shall not be installed closer than ten feet to septic tank drainfields [§290.44(e)(8)].

17. The contractor shall disinfect the new waterlines in accordance with AWWA Standard C-651-14 or most recent, then flush and sample the lines before being placed into service. Samples shall be collected for microbiological analysis to check the effectiveness of the disinfection procedure which shall be repeated if contamination persists. A minimum of one sample for each 1,000 feet of completed waterline will be required or at the next available sampling point beyond 1,000 feet as designated by the design engineer [§290.44(f)(3)].

18. Dechlorination of disinfecting water shall be in strict accordance with current AWWA Standard C655-09 or most recent.

(This page is intentionally left blank)

Johnson County
Special Utility District

Specifications

(This page is intentionally left blank)

SPECIFICATIONS

Johnson County Special Utility District
January 2019

(This page is intentionally left blank)

Table of Contents

SECTION 1

GRADING, EXCAVATION, BACKFILL, EMBANKMENTS

1-01 GENERAL:

The Contractor shall perform all work classified as grading, excavation, backfill and embankments as required in the plans to the lines, grades, contours, dimensions and elevations as shown on the plans. This includes all work as follows:

(a) Site grading
(b) Preparation of sub-grade
(c) Preparations of foundations
(d) Structural excavation
(e) Removal and disposal of brush, trees, rocks and other debris
(f) All necessary shoring and sheeting to protect Personnel, and excavations
(g) De-watering as necessary or required
(h) Stabilization as necessary or required including the placing of select materials
(i) The tamping and compacting as necessary or required

1-02 STRUCTURAL EXCAVATION AND TRENCHING:

All excavation of every description and of whatever substance may be encountered shall be performed to the lines and grades as called for on the plans and standard details. The Contractor shall accomplish such work in accordance with the standard practices pertinent to the work being performed. Excavation shall be held to the minimum required for proper performance of the work. Additional excavation may be required if, in the opinion of the Engineer, it is necessary to properly perform the work.

Where excavation requires "blasting" or any other hazardous operation, the Contractor shall use due care to protect adjacent property, and shall protect the Owner from any and all claims arising from such operations. Prior approval of the Engineer will be required.

All suitable material removed from the excavations shall be used in the formations of fills, embankments and backfilling. Materials deemed unsuitable for these purposes shall be disposed of by the contractor. Excess materials will be disposed of by the contractor.

The Contractor should familiarize himself with the types of excavation to be performed and the type of material to be handled. No consideration of claims for extra compensation due to the type of material in the excavation will be made.

1-03 BACKFILLING TRENCHES:

Trenches shall be carefully backfilled first to a horizontal plane six inches above the top of the pipe and pipe bells with sand consisting of clean durable uncoated grains free from lumps and organic material. Native material from trench excavation may then be used with no rocks larger than 3 inches in diameter or clay lumps larger than 6 inches in diameter allowed. Topsoil that was removed in the top 6 inches of the pipe trench will be stored separately and placed in the top 6 inches of the trench. The backfill will be mounded slightly above the natural ground. Backfilling, above the sand enveloped around the pipe, in areas that lie within a public right-of–way will be backfilled in accordance with the permit conditions if a permit is issued by the appropriate political jurisdiction If no backfill conditions are included in the permit then the backfill requirements utilized by the political subdivision will be used.

1-04 GRADING:

After construction is completed and all backfilling has settled, all areas within the work site shall be graded as directed by the Engineer. All debris shall be cleaned up and the site left in a neat and orderly appearance. At the time of final inspection, the contractor will provide a signed statement from the property owners stating the site cleanup is satisfactory. The Contractor will be responsible for all trench settlement during the warranty period.

1-05 PROTECTION OF EXISTING UTILITIES:

The Contractor shall protect existing utilities from damage during excavation and backfilling of trenches. If damage to existing utilities occurs, the Contractor will be responsible for repair or payment for repair of the damage at no expense to the Owner for such damages. It is the Contractor's responsibility to verify the location of all existing utilities in the field whether located on the maps or plans or not.

1-06 PAYMENT:

No separate payment will be made for trenching; disposal of unsuitable or excess materials and backfilling and all costs in connection therewith shall be included in the contract price for the items to which the work pertains.

SECTION 2
WATER SUPPLY LINES AND PIPING

2-01 GENERAL:

Water mains shall be a minimum diameter of 8 inches. A variance can be given to allow a 6" line extension for subdivision development in pressure planes 3,5,9,10,18,19, or those that have only ground pumping facilities, and the development is not subject to jurisdictional requirement to make fire flow available for some amount greater than what a 6" line extension can provide. The water mains shall be of the type of materials as specified herein and in the plans. All pipe and fittings shall be new and unused unless otherwise approved by JCSUD. Any pipe found to be defective before or after installation shall be removed from the system and replaced with sound pipe at no additional cost to the Owner. All fittings shall be wedged against the vertical face of the trench by means of concrete thrust blocks. All end of lines shall have a 2-inch flush valve installed unless otherwise directed by JCSUD.

2-02 STANDARDS:

The latest edition of the following standards and specifications form a part of this Specification to the extent indicated by any reference thereto:

(a) AMERICAN SOCIETY FOR TESTING MATERIALS

- ASTM D-2241 Standard specification for Polyvinyl chloride (PVC) plastic pipe (SDR-PR)
- ASTM F-477 Standard Specification for Elastomeric Seals for joining plastic pipe.
- ASTM D-3139 Standard specification for Plastic Pressure Pipe Using Flexible Elastomeric Seals.
- ASTM D-1784 Standard Specification for Rigid Polyvinyl Chloride (PVC) for Chlorinated Polyvinyl Chloride (PVC) Compounds.

(b) AMERICAN NATIONAL STANDARDS INSTITUTE (AMERICAN WATER WORKS ASSOCIATION)

- ANSI/AWWA C 104 American National Standard for Cement-Mortar Lining for Cast-Iron and Ductile Iron Pipe and Fittings for water.
- ANSI/AWWA C 105 American National Standard for Polyethylene Encasement for Ductile Iron Piping for Water And Other Liquids
- ANSI/AWWA C 106 American National Standard for Cast Iron pipes centrifugal cast in metal molds, for water or other liquids.
- ANSI/AWWA C 111 American National Standard for Rubber Gasket Joints for Cast-Iron and Ductile Iron pressure pipe and fittings.
- ANSI/AWWA C 110 American National Standard for Ductile-Iron and Gray Iron Ductile Iron fittings, 3 inch Through 48 inch for water for water or other liquids.
- ANSI/AWWA C 153 American National Standard for Ductile-Iron pipe, centrifugal cast in metal molds or sand-lined molds, for water or other liquids

(c) AMERICAN WATER WORKS ASSOCIATION

- ANSI/AWWA C 500 AWWA Standard for Gate Valves for Water and Sewerage Systems.
- ANSI/AWWA C 502 AWWA Standard for Dry-Barrel Fire Hydrants
- ANSI/AWWA C 509 AWWA Standard for Resilient Seated Gate Valves for Water and Sewerage Systems.
- ANSI/AWWA C 600 AWWA Standard for Installation of Ductile-Iron Watermains and their Appurtenances for Water and Sewerage Systems.
- ANSI/AWWA C 605 AWWA Standard Underground Installation of Polyvinyl Chloride (PVC) Pressure Pipe and Fittings for Water Mains
- ANSI/AWWA C 651 AWWA Standard for Disinfecting Water Mains
- ANSI/AWWA C 900 AWWA Standard for Polyvinyl Chloride (PVC) Pressure Pipe and Fabricated fittings, 4 inch through 12 inches for water distribution.
- ANSI/AWWA C 905 AWWA Standard for Polyvinyl Chloride (PVC) Pressure Pipe and Fabricated fittings, Nominal Diameters 14 inches Through 36 inches
- ANSI/AWWA C 909 AWWA Standard for Molecularly Oriented Polyvinyl Chloride (PVC) Pressure Pipe and Fabricated fittings, 4 inch through 12 inches for water distribution.

(d) NATIONAL SANITATION FOUNDATION:

- NSF No. 14 National Sanitation Foundation Standard No, 14 for Thermoplastic materials, Pipe, Fittings, Valves, Traps, and Joining
- NSF No. 61 Drinking Water System Components-Health Effects

(e) TEXAS NATURAL RESOURCES CONSERVATION

- Chapter 290 Rules – Water Hygiene

2-03 PIPE ORIGIN:

Any and all pipe is subject to rejection if, in the opinion of the inspector or JCSUD representative, the pipe is in any way damaged, defective, or abnormally worn due to excessive sun exposure prior to instillation. All pipe shall be of a domestic origin unless otherwise approved by the Engineer. Each section of pipe shall be in accordance with latest AWWA Standard for the material. No used pipe can be used. Any and all pipe not so stamped and certified shall be rejected.

2-04 DUCTILE IRON PIPE:

MATERIALS: All Ductile-Iron pipe shall conform to ANSI/AWWA C 151, IRON GRADE 60-42-10, wall thickness class 50. All Ductile-Iron fittings shall conform to ANSI/AWWA C 153 iron grade 70-50-05, 350 psi rated for all pipe sizes. Cement mortar lining for Ductile-Iron pipe and fittings shall conform to ANSI/AWWA C 104, except the lining shall be 1/16 inches thick. Exterior coating for Ductile-IRON pipe and fittings shall be bituminous.
Each length of pipe and each coupling shall be subjected to a hydrostatic test (at factory) of not less than 500 psi with the pipe under full test pressure for at least 10 seconds.

2-05 PVC PLASTIC PIPE:

MATERIAL: Plastic pipe for lines 4 inches in diameter up to 16 inches in diameter will be AWWA C-900 DR-18. For pipe diameters greater than 16 inches in diameter, ductile iron pipe will be used. All pipe will meet the requirements of ANSI/NSF 61. If pipe material other than C-900 is used then it will be identified on the plans.

STORAGE: All plastic pipe shall be laid out on a flat surface to prevent disfiguring the pipe. Any pipe stored outdoors for a prolonged period of time should be covered with some type of protective material.

DAMAGED PIPE: No damaged pipe should be used in the system, except that localized damage may be cut out of the pipe and the balanced used. Gouges and scratches, which penetrate more that 10% of the wall thickness, shall be cause for the rejection of the pipe.

CUTTING: All pipe cuts should be square and burrs should be removed before installation of pipe.

2-06 INSTALLATION-PIPE:

The trench should be straight with a minimum trench width as specified in the following table. The trench width for pipe not included in the table will be specified on the plans. A sand bed of 6-inch minimum thickness under the pipe and pipe bell shall be prepared prior to placing the pipe in the trench. A minimum of 6 inches of sand is required around the pipe and pipe bell. If the pipe trench has ground water or is being laid across a drainage channel then 3/4" washed rock shall be laid to encompass the pipe to a depth of 6 inches below, above and on the sides of the pipe. Any substitution material must be approved by the Engineer. All pipe shall have at least a 5-foot setback onto private property from ROW line when pipe is being installed on easement. The minimum depth of cover is 42 inches from the finished ground surface grade to the top of the pipe. In questions of interpretation of conflicts for installation procedures, JCSUD Specifications take precedence over AWWA Standards which take precedence over manufacturers recommendations. All pipes laid will have tracer wire. The wire shall be solid copper at least #12 AWG or larger and insulated. All splices shall be watertight and underground type. The tracing wire shall be taped to the top of the pipe using PSPWT210 2"x100'(10 mils thick) Poly Tape (ASTM D-1000), at intervals of every 36 inches to prevent dislocation of the wire during backfilling. The wire shall be extended to ground surface at all valves, fire hydrants, and other locations shown on drawings using the Copperhead brand Snakepit product # **CD14*TP** test station or JCSUD approved equal. The tracer wire shall be brought up on the outside of the valve box as shown on **page 13** of the standard details.

Fittings, valves and ductile iron pipe will be wrapped in plastic wrap to protect fittings and bolts from corrosion and contact with concrete. Tie-ins to existing lines will not be allowed without the permission of JCSUD. No tie in will be done on Mondays, Fridays or days before Holidays.

The interior of all pipes shall be cleaned thoroughly and kept clean during the progress of construction. When any line is not being worked on, it shall be plugged with a water-tight plug to prevent the entry of any foreign matter. All pipes shall be laid in such a manner as to allow the full length of the section to rest solidly on the pipe bed. When installing bends, fittings, or

ending a section of line, unless system design prohibits, a full joint of pipe is to be installed into and out of a bend or where the line ends. Pipe shall not be laid in water or in any trench when the trench or weather conditions are unfavorable for work, unless authorized by JCSUD.

2-07 TIE- INS AND BRANCH CONNECTIONS:

All main line tie-ins will have a flanged tee with 3 flg x MJ valves. If allowed by JCSUD, a stainless steel tapping band with flange and flange x MJ valve can be installed to facilitate a wet tap. A tapping sleeve cannot be used when the tap is the same size as the main that it is connecting to. A flanged tee with flange x MJ valves on all sides must be cut in to properly make a connection. When the tie-in calls for an immediate step down for a road crossing, there will be an anchor coupling used in between the valve and 45 bend. The Contractor will be responsible for notifying the affected customers 48 hours in advance that will be out of water. The contractor will have the proper fittings, blocking, equipment, and labor to install the fitting and to minimize the time the water will be off. The Contractor will verify the size, type and depth of the pipe being tied into. If the new line is to be tied into the end of an existing line, a valve will first be installed to facilitate isolation for testing of the new water line as shown on the plans.

2-08 MAIN LINE FITTINGS WITH NO ATTACHED VAVLES OR FITTINGS:

All tees, wyes, plugs, caps, reducers, crosses, and bends will be ductile iron with mechanical connections on lines 3 inches or larger. Unless otherwise approved by JCSUD, a full joint of pipe will be laid into and out of all bends. MEGA-LUG or STARGRIP restrained glands will be used on all fittings, plugs and flush valves in addition to concrete blocking. All concrete thrust blocks are required to extend from the fitting to unexcavated native soil. All concrete thrust blocks will be inspected before and after concrete is poured by the Engineer or his designated representative. Blocking which is found to be inadequate shall be removed and re-blocking shall be accomplished.

2-09 CUL-DE-SACS:

When cul-de-sacs are designed within a subdivision the water line size shall be reduced to 4" once the radius begins, unless deflection of the originally designed pipe size can be properly achieved without exceeding the pipe manufacturer's recommendations on deflections. A 45 bend will be attached to the reducer using a foster adapter to help achieve the radius that is needed. The JCSUD Standard Detail Drawing on page 19 should be referenced for cul-de-sacs. Any changes to this standard must be approved by JCSUD.

2-10 LINE FITTINGS WITH ATTACHED VAVLES OR FITTINGS:

All tees, wyes, plugs, caps, reducers, crosses, and bends will be ductile or cast iron. These fittings will be flanged on all faces unless shown on the drawings. Connections between valves and other fittings will be flange by flange. Any MJ fittings that are to be installed together will be done so using a Foster Adaptor. Connections between flanged fittings and pipe will be made with a flanged by mechanical joint adapter. Unless design restricts, a full joint of pipe will be laid into and out of all bends. MEGA-LUG or STARGRIP restrained glands will be used on all pipe connections to the mechanical joint adapters. A 20' piece of pipe will be used out of all fittings, unless otherwise approved by JCSUD. When a vertical transition utilizing 45 degree bends is

required, ductile iron pipe and all thread will be used in between the two 45 bends.

All fittings will have concrete thrust blocks that are required to extend from the fitting to unexcavated native soil. All concrete thrust blocks will be inspected before and after concrete is poured by the Engineer or his designated representative. Blocking which is found to be inadequate shall be removed and re-blocking shall be accomplished.

2-11 FIRE HYDRANTS:

Fire hydrants shall not be installed on main lines less than 6 inches in size. Distances between installed fire hydrants shall not be more than 1000 feet. When being set within a city's jurisdiction the length of line between each hydrant shall be governed by their standards only when it is less than 1000 feet. Hydrants will be either a Mueller Super Centurion 250, Clow Medallion, American Darling HB-84-B or M&H Style 129. All fire hydrants shall conform to ANSI/AWWA C 502 compression type, 150 working pressure, traffic model, and dry top unless otherwise specified. All fire hydrants will be painted red at the factory and set level and plumb. The 5-1/4 inch cap shall be a minimum of 18 inches from finished grade with a maximum of 24 inches. The Tee for installation of the hydrant shall be MJ x flange with a flange x MJ valve. An 18 inch anchor coupling shall be used to connect the hydrant to the valve. If a lead is needed and it's use approved by JCSUD, the lead must be C-900 PVC and be one solid piece from the valve to the fire hydrant. A suitable support and thrust block will be installed to support the hydrant. The drainage holes will not be blocked by the thrust block or the support.

2-12 COMMERCIAL FIRE PROTECTION LINES:

All fire protection lines shall be separated from the distribution system by means of an approved double check detector assembly which shall be installed inside a precast concrete vault. The approved Park double check vault is referenced in the standard details on page 20. The double check detector assembly shall have a JCSUD approved 5/8" x 3/4" low flow detector check meter installed.

2-13 GATE VALVES:

Gate valves shall be designed for a minimum water working pressure of not less than 200 psi. Valves shall have a clear waterway equal to the full normal diameter of the valve and shall be opened by turning counter-clockwise. The operating nut shall have an arrow, cast in the metal, indicating the direction of opening. Each valve shall have the manufacturers' initials, pressure rating, and year of manufacture cast on the body. Prior to shipment from the factory, each valve shall be tested by hydraulic pressure equal to twice the specified water working pressure. Valves will be M&H Style 4067, Clow Resilient Wedge, Mueller A-2360 series, American Flow Control Series 2500 or Kennedy KenSeal II. Valves 2-inches through 16-inches shall be resilient-seated gate valves conforming to ANSI/AWWA C 509. All valves shall be supported by use of non-twist concrete support blocks as shown on the standard details or plans. Two (2)-inch valves shall be threaded bodied and mounted by means of using brass nipples. Valves installed deeper than 3-½ ft. to the top of the operating nut, will have a valve extension made and installed to facilitate operation of the valve with a standard valve wrench. All intersecting lines will have a cluster of appropriate valves, unless otherwise specified. Main line valves attached only to pipe will have mechanical joints. Valves attached to fittings on two ends will be flanged. Valves attached to fittings and pipe will be flanged by mechanical joint. All valves installed shall have an approved concrete support resting underneath it. The AWWA C 509 specification is modified

with all exposed nuts and bolts on the valves other than the operating nut will be ASTM-304 Stainless Steel.

2-14 MISCELLANEOUS VALVES:

All air relief valves shall be A.R.I. D-040-C 1" and be set at the places designated by JCSUD. All blow off, pressure regulator, and flush valves shall be of the types and sizes and at the locations shown on the plans. Dead end lines will have a flush valve at the end of the line. They will be connected by a 2-inch MJ tapped cap or an MJ tap plug, depending on whether the connecting pipe ends in a fitting or just pipe, with retainer glands and properly blocked, set level and plumb. The flush valve will stand18-24" inches from finished grade to Center Line of upper 90 and plugged with a galvanized plug with the outlet turned toward the drainage ditch.

2-15 VALVE BOXES:

Valve boxes shall be cast iron with cast iron lids and installed so as to be centered over the valve and be set plumb, with the soil around the box tamped equal to the distance of the disturbed area. If the valve box needs an extension to reach the surface then a piece of ductile iron pipe will be used, PVC pipe is not allowed. If an extension is needed for the valve box then a piece of ductile will be used to make up the difference, PVC is not allowed. All valve locations shall be marked with a commercially manufactured steel post and valve marker as shown on **page 7** of the standard details. A 24" x 24" x 6" concrete pad poured around all valve boxes will also be required, completed before final inspection. In areas of multiple valves, one larger concrete pad that encompasses all of the valves will be poured per JCSUD.

2-16 WATER SERVICE CONNECTIONS:

All taps must be made with an approved tapping machine. All water service connections will be tapped into the water line using a tapping saddle. Tap saddles will be brass or other approved material with CC threads for brass corporation stops. Tapping saddles will be located perpendicular at the property lines between lots and perpendicular to the water line unless shown at other locations on the plans. Taps for near side connections will be made on top of the pipe when on private property and at 90 degrees when in ROW. Taps for far side connections will be made on the side of the pipe at 90 degrees from the top of the pipe. All taps made must be 1". **All tap saddles must be a 1" Smith-Blair Style 317**. If the meter is to be a single 5/8" x 3/4", the service must be reduced to 3/4" at the saddle using a 1" x 3/4" brass bushing. All tapping sleeves must be **Smith-Blair model 663**. Tapping sleeves will only be used when specified on the plans.

A **compression corporation stop** will be attached to the tapping saddle. A 1-inch corp stop will be used for all dual connections and all long connections. A 3/4-inch stop will be used for 3/4" single short connections ONLY. Corporation stops for 1-inch "long side" services will be either Ford Model F1000-4-G-NL or Mueller B-25008N. For 3/4-inch "short side" single service connections either Ford F-1000-3-G-NL or Mueller B-25008N. For 1- inch and 3/4 - inch "short side" dual services the corporation used shall be Ford Model F1600-4-NL. For 1- inch "short

side" single service connections either F1000-4-G-NL or Mueller B-25008N.Copper will be used on all "short" side services. Copper tubing shall conform to seamless copper water tube, ASTM Designation B 88, Type K Class 1, annealed (soft) copper tubing for use with compression-type or flared fittings. "Long" side connections crossing County Roads will be SDR-9 250-psi poly (1" min.) encased with 1 ½ inch Schedule 40 Glued PVC laid Flowline to Flowline or from the Back of Curb to Back of Curb. State Road crossing encasement will conform to the TxDOT Permit requirements. The road crossing will connect to a brass tee for duals or a single connection just outside the ROW line. Copper tubing (as above) will be used to the curb stop a maximum of 3 ft. inside of the property line, where it is clearly marked. Where duals are to be set, the boxes will be set on the property on which it will service, 5 to 7 feet from the property line. **The tees** for "long side" services will be either FORD model T444-334-G-NL or Mueller 15381N series. Tees for 3/4 - inch and 1- inch "short side" dual services will be FORD model T448-334-G-NL, this male iron pipe by CTS tee will screw directly into the female iron pipe by CC thread corporation. **Compression Coupling** will be either Ford C 44-33G-NL or C44-44G-NL or Mueller 15403N or 15404N, these compression couplings are not allowed to be in between the corporation and the curb stop on short taps.

Angle type brass curb stops with Wing Locks, 360 degree turns, i.e.; Ford BA43-444WR-G-NL will be used for 1 inch. A Ford BA43-232-WR-G-NL for 5/8 inch x 3/4 inch x 3/4 inch, this will be used on all standard 3/4-inch service connections, and Ford BA43-342-WR-G-NL for 1 inch CTS X 3/4 inch meter swivel or Mueller B24258-3 will be used. Curb stops will be set level and plumb, approximately 1" from the rear of the box, aligned with the pre-fab hole in the meter box to allow for easy installation of the meter and plumbing. One curb stop allowed per box, plugged with a 1" PVC plug and locked with an AMERICAN LOCK 23762 A40KA- Series (all keyed alike). The lock needs to have electrical tape wrapped three (3) times end over end covering the key hole. Meter boxes will be NDS D1200-DICIR series with a metal reading flap. Service lines 1.5" & larger will have a 2" RS valve with valve box installed at the tap of the existing line. The meter box used for 2" meters will be an NDS 17" X 30" X 18" Model #126BCDMCIFB. When service lines are laid in a development that has curb and gutters, a "W" will be required to be etched in to the curb marking where the meter box is or where the road crossing is.

2-17 WATERLINE SEPARATION:

Water line and sanitary sewer line crossings shall meet the requirements of Texas Commission on Environmental Quality (TCEQ) Chapter 217.53. In addition, water lines and sanitary sewers shall be installed no closer to each other than 9 feet and where this cannot be achieved, the sanitary sewer shall be constructed of SDR 26 (ASTM D2241) 160 psi pressure pipe with water tight joints used in water main construction for the 9 foot clearance. No physical connection shall be made between a drinking wat or any appearance thereof shall be constructed so as to prevent any possibility of sewerage enter No sewer lines carrying domestic or industrial wastes shall cross suction mains to pumping equipment. Water lines shall not be installed closer than 10 feet to a septic tank drainfield, it must be encased for the line length that is less than 10 feet from the drainfield.

2-18 HIGHWAY and RAILWAY CROSSING PIPE BORES:

All bores will conform to the requirements of the entity that controls the roadway where the work is taking place (TXDOT, County). All crossings of public and private roads and railways will be

bored unless noted on the plans. All pipe bores for State Road Crossings and Railroad crossings shall conform to the following criteria: All bore encasement pipe sizes will be determined in **Table 2-18**. The encasement pipe will be a minimum pipe thickness of three-eighths (3/8) inch and shall have a minimum yield strength of 35,000 psi. The exterior of the pipe will be coated in accordance with the latest revision to AWWA Standard C203 or AWWA Standard C214.

TABLE 2-18: ENCASEMENT PIPE SIZE REFERENCE

Material	Nominal Pipe Diameter (inches)	Minimum Trench Width (inches)	3/8"(.357") Thick Steel Encasement size (inches)	PVC Encasement size (inches)
PVC	**4**	21	10	10 SDR 35
PVC	**6**	24	12	12 SDR 35
PVC	**8**	27	14	15 SDR 35
PVC	**10**	30	16	18 PS 46
PVC	**12**	33	20	21 PS 46
D.I.	**8**	27	14	12 SDR 35
D.I.	**10**	30	16	18 PS 46
D.I.	**12**	33	20	21 PS 46
D.I.	**14**	33	22	21 PS 46
D.I.	**16**	36	24	24PS 46
D.I.	**18**	35	26	27 PS 46
D.I.	**20**	37	28	27 PS 46
D.I.	**24**	42	32	30 PS 46
D.I.	**30**	48	34	36 PS 46

Other pipe bores shall conform to the following criteria. All bore encasement pipes will be a minimum internal diameter four (4) inches in diameter greater than the nominal outside diameter of the pipe. The encasement pipe will be SDR-35 PVC pipe. All gaskets will be installed.

All pipe bores shall also meet the following criteria: The top of the casing will be a minimum of 60 inches below the lowest surface elevation. The pipe will be separated from the casing by CCI Model CSS12 Stainless Steel spacers installed in accordance with the recommendations of the manufacture. The ends of the casing will be sealed with Espansit end seals installed in accordance with the manufacturer's recommendations. The encasing pipe will not be sloped more than one-eight (1/8) inch per foot of casing. No open cuts will be made on State Roads within 12 feet of paved surfaces unless written authorization is received from the Texas Department of Transportation. On all other crossings, no open cuts will be made within 5 feet of paved surfaces unless written authorization is received from the political jurisdiction that owns the road or the property owner. Open cuts for railroads will be shown on the plans.

2-19 DRIVEWAY CROSSING PIPE BORES:

All paved driveways will be bored unless noted on the plans. All bore encasement pipes will be sized according to **Table 2-18.** The encasement pipe will be SDR-35 PVC pipe. All gaskets will be installed.

All pipe bores shall also meet the following criteria: The top of the casing will be a minimum of 42 inches below the lowest surface elevation. The maximum depth below the lowest point will be 60 inches unless shown on the plans. All pipes bored under a driveway will not be permitted to have a bell inside the casing. No spacers will be used on the outside of the pipe. If a bore is longer than one pipe joint, then the pipe will be separated from the casing by CCI Model CSS12 Stainless Steel spacers installed in accordance with the recommendations of the manufacturer. The ends of the casing will be sealed with plastic used for wrapping ductile iron fittings and approved by JCSUD. The encasing pipe will not be sloped more than one-eighth (1/8) inch per foot of casing. On all other crossings, no open cuts will be made within 5 feet of paved surfaces unless written authorization is received from the property owner.

2-20 SERVICE LINE ROAD BORES and CROSSINGS:

All pipe bores or road crossings for service lines 1 inch or smaller in diameter shall conform to the following criteria: All piping for service line road bores and road crossings for single or dual meter sets will be 1 inch SDR 9 Poly with 1-1/2 inch schedule 40 glued PVC pipe as encasement, using a long slip coupling to piece together. All other encasement pipes will be a maximum internal diameter one (1) inch greater than the outside diameter of the service pipe diameter. The top of the casing will be a minimum of 42 inches below the lowest elevation unless specified on plans. The maximum depth below the lowest point will be 54 inches unless shown on the plans. The encasing pipe will not be sloped more than one-eighth (1/8) inch per foot of casing. No open cuts will be made within 2 feet of paved surfaces unless written authorization is received from the political jurisdiction that owns the road. All service line road bores for service lines greater than 2 inches in diameter shall conform to the criteria for Highway and Railway crossing bores.

2-21 GAS LINE CROSSINGS:

When crossing a gas line or gas easement the rules and specifications of the gas company who owns the easement will be followed. If an encroachment agreement is needed then the engineer shall acquire such agreement and furnish a copy to JCSUD. All gas lines and their respective easements will have SDR-35 PVC encasement laid from easement ROW line to ROW line. Typical JCSUD encasement specifications and procedures will be followed.

2-22 TAPS FOR DISINFECTION:

If a water service tap is not installed within 1000 feet of line length, a tap will be installed so that no length of pipe run will be greater than 1000 feet without a tap.

2-23 CLEAN UP & SIGN OFF:

The Contractor shall, as the project progresses, restore the site to its original condition or better, including the smoothing out of all excavation. The Contractor upon completion of

the project shall provide a signed letter from each property owner affected by the construction, a letter or statement indicating that the property owner is satisfied with the restoration.

2-24 TRENCH SAFETY:

In accordance with various State and US Government laws and regulations, whenever trench excavations exceed a depth of five (5) feet, a trench safety system will be installed. The trench safety system must be developed and installed to meet the requirements of both State and US government laws and regulations.

2-25 MEASUREMENT AND PAYMENT:

Measurement and payment will be based on completed work performed in strict compliance with the plans and specifications. Measurements of the pipe shall be along the centerline and will include all valves, fittings and service line to a point five (5) feet from the meter. Limits of construction are shown on the plans. All trenching, backfill, concrete thrust blocks, sewer line crossings and fittings shall be included in the bid price per linear foot of pipe. Drilled crossings or encased crossings open cut will be paid for separately in addition to the payment for the pipe. Meters, fire hydrants and valves along with gravel and asphalt replacement will be paid for separately. Monthly interim payments will be made at 95% of the completed work as agreed upon between the Contractor and the Owner. Payments for materials on hand and delivered to the project site can be made from the manufacturer's invoice up to 50% of the unit item bid price. Final payment will be made after acceptance of the work by the Owner and sign off by the property owners.

SECTION 3

STERILIZATION

3-01 GENERAL:

Each unit of the water distribution system shall be sterilized with chlorine before acceptance for domestic operation. The chlorinating material shall conform to the requirements of AWWA B 300-10.

3-02 CHLORINATION:

The amount and method of chlorination shall be in accordance with current TCEQ requirements and AWWA C651 using the continuous-feed method. In case of conflicting requirements, TCEQ Chapter 290 shall govern. The initial free residual must be equal to or above 25mg/L and after a 24 hour hold time have a free residual equal to or above 10mg/L. A JCSUD representative must be present to perform the residual test.

3-03 TESTING:

Bacterial Samples will be collected and tested for every 1000 feet of line installation according to TCEQ Chapter 290 Rules.

After the applicable contact period, the system shall be flushed with clean water until the residual chlorine content is not greater than the residual chlorine content of the water supplied. The effectiveness of the disinfection procedure shall be established by bacteriological sampling and analysis. If results are not satisfactory, procedure shall be repeated until satisfactory results are obtained. Before being placed into service, the entire system shall be disinfected until a sample of chlorine free water from each line is found to be free of organisms of the Coli-Aerogenes groups. The disinfection and submission of samples shall be in accordance with the requirements of TCEQ - i.e. one sample per 1000' of pipe.

3-04 PAYMENT:

Separate payment will be made for this item and the cost thereof should be separate from the unit price for the distribution line in the proposal.

SECTION 4

PRESSURE TESTING OF LINES

4-01 GENERAL:

Unless otherwise specified by the Engineer, hydrostatic pressure tests will be made as directed by the Engineer and under his supervision. Pressure during the testing of the lines shall be raised to the rated working pressure at the lowest elevation of the pipe and that pressure maintained for a period not less than four (4) hours. The test will be managed such that no more than 50 feet elevation difference occurs on the segment tested.

4-02 INSPECTION:

During the testing period, critical pressure points shall be inspected for leaks. Pressure tests shall be conducted as follows:

1. Fill pipe with water until all air is exhausted.
2. Bring pressure to rated pipe pressure by pumping from a container.
3. Refill container and maintain pressure for four (4) hours.
4. Measure water required to refill container to pre-test level.

Defective pipe or fittings, etc. disclosed by the test shall be replaced by the Contractor with sound material, and the testing continued or repeated until the test results are satisfactory.

4-03 LEAKAGE LIMIT:

No piping installation will be accepted until, or unless, the leakage is less than ten (10) gallons per inch of pipe diameter per mile of pipe per 24 hours.

Should any test of combined sections of line disclose leakage per mile greater than that specified above, or if individual sections show leakage greater than the specified limit, the Contractor shall locate and repair or replace defective joints or segments of line until leakage is within the acceptable limits. Leakage losses shall be within the allowances specified before acceptance of the project. No leakage shall be permitted in solvent cement joints.

4-04 PAYMENT:

A separate payment will be made on this item and the cost involved thereof should be separate from the unit price for the distribution line in the proposal.

SECTION 5

PORTLAND CEMENT CONCRETE

5-01 GENERAL:

The works covered by this section consists of furnishing all labor, materials, and equipment necessary, and performing all operations in connection with the installation of concrete work in accordance with these specifications and the applicable drawings.

5-02 MATERIALS:

(a) Aggregate: Both coarse and fine aggregate shall conform to Federal Specifications SS-A-281. Coarse aggregate shall be well grades from find to course, within prescribed limits. The maximum size shall be 1-1/2 inches.

(b) Cement: Only one brand of each type of cement shall be used for exposed concrete in any individual structure. Cement reclaimed from cleaning bags or leaking containers will not be used. Cement shall be used in the sequence of receipt of shipment, unless otherwise directed by the Engineer.

All Portland cement will comply with Federal Specification SS-C-192, Type 1 or 1A.

5-03 REINFORCING STEEL:

All reinforcing steel will be fabricated to the dimensions and shapes as indicated by the plans. Prior to placement, all steel bars will be cleaned of rust, scale and any other foreign matter that could prevent a good bond with the concrete. Laps of splices shall be of adequate length to transmit stresses and all splices in adjacent bars shall be staggered. The steel, complete in place shall comply in all respects with the ACI and CRSI codes.

5-04 CLASS OF CONCRETE:

All concrete shall be 5 sack and shall have a compressive strength of 3000 psi at 28 days. No high early strength concrete will be accepted.

5-05 PAYMENT:

No separate payment will be made for the work covered by this section, and all costs in connection therewith shall be included in the bid price for the items of which they are a part.

SAMPLE FORMS

A709

Certificate of Construction Completion (COCC)

(Submit one for each Prime Construction Contract)

Grant Recipient: _____ TxCDBG Contract No: _____

This is to certify that all construction work has been completed and a final inspection of the project described below was conducted on the _____ day of_____,_____. Contract was entered into on the _____ day of _ _____, _____ between the city/county of _____ and _____ for the construction of _____.

This is to further certify that:

1. The work has been completed in accordance with the plans and specifications and all amendments, change orders and supplemental agreements thereto.

2. The sum of $ _____, has been deducted from the final payment to the Contractor in accordance with any contract liquidated damages requirements, separate from any liquidated damages resulting from Davis-Bacon compliance.

3. All programmatic requirements have been met, all claims and disputes have been settled, all warranties have been received, and all liens have been released.

4. The Contractor has presented on behalf of itself and its sureties, satisfactory evidence that he or she will repair, replace and rectify any faulty workmanship and/or materials discovered in the work within a period of 12 months from this date, as provided in the Contract.

5. All bills for materials, apparatus, fixtures, machinery, labor, and equipment used in connection with the construction of this project have been fully paid.

6.

Amount of Original Contract	$_____
Cumulative Change Orders	$_____
Final Amount of Contract	$_____
Less Previous Payments	$_____
Less Deductions (from #2 above)	$_____
FINAL PAYMENT (Balance)	$_____

7. The Final Payment above is now due and payable.

Certified by the following Engineer, Contractor, and Chief Elected Official/Designee:

_____
Engineer

_____
Title

_____
Firm

_____
Contractor

_____
Title

_____
Firm

_____
Chief Elected Official/Designee

_____
Title

_____
City / County

09/01/2020

(This page is intentionally left blank)

CONTRACTOR'S FINAL PAYMENT AFFIDAVIT

Locality: _____ **TX CDBG No:** _____

Contractor: _____ **Date:** _____

BEFORE ME, THE UNDERSIGNED AUTHORITY, on this day personally appeared _____ _____, who being duly sworn, on oath, says that he is a duly authorized representative of _____ _; Contractor, and that all terms of the Contract for the completion of certain public works described as _ _____ _____; City/County of _____ _____, Texas have been satisfactorily completed and that ALL sums of money for payrolls, bills for material and equipment, and other indebtedness connected with the Work for the Owner or its property might in any way be responsible to the best of my knowledge and belief, have been paid or will be paid or otherwise satisfied within thirty days after receipt of final payment from the Owner, or within the period of time required by Article 601f, Vernon's Civil Statutes. Payments not made in full at the time of this affidavit are listed below.

FINAL PAYMENTS pending as of this date hereof are: _____ **None Pending** _____ **As Listed Below**

Individual or Co. Name	Mailing Address	Amount Owed

_____
Signature

_____
Title

Affidavit must be signed by an individual owner or partner in partnership, or by a person authorized by by-laws or Board of Directors to sign for a corporation. If Contractor is a joint venture or partnership of individuals, either may sign, but if a joint venture in which a corporation is a party, separate affidavits must be executed by each corporation and by each individual owner or partnership. In the event subcontractors, laborers, or material suppliers have not been paid in full, the Contractor shall list here on the amount owed and the name and address of each subcontractor, laborer, or material supplier to whom such payment is owed.

Sworn and Subscribed before me this, the _____ day of _____ _____, 20_____.

_____ (SEAL)

Notary Public in and for _____
County, Texas

(This page is intentionally left blank)

00611 MAINTENANCE BOND

STATE OF TEXAS §
COUNTY OF COLLIN §

KNOW ALL MEN BY THESE PRESENTS:

That _____, a corporation organized and existing under the laws of the State of _____, and fully authorized to transact business in the State of Texas, whose address is_____ of the City of _____ County of _____, and State of _____,(hereinafter referred to as "Principal"), and _____ _____ (hereinafter referred to as "Surety", a corporation organized under the laws of the State of_____ and authorized under the laws of the State of Texas to act as surety on bonds for principals, are held and firmly bound unto _____(hereinafter referred to as "Owner") and unto all persons, firms and corporations who may furnish materials for or perform labor upon the buildings, structures or improvements referred to in the attached Contract, , in the penal sum of _____ Dollars ($_____) in lawful money of the United States, for the payment whereof, the said Principal and Surety bind themselves, and their heirs, administrators, executors, successors, and assigns, jointly and severally, firmly by these presents:

WHEREAS, the Principal has entered into a certain written contract with the Owner, dated the _____day of_____, 20___, to which said Contract is hereby referred to and made a part hereof and as fully and to the same extent as if copied at length herein for the construction of a Waterline Improvement Project FM 4 & CR 1121.

NOW, THEREFORE, THE CONDITION OF THIS OBLIGATION IS SUCH, that the bond guarantees the full and proper maintenance and repair of the work herein contracted to be done and performed for a period of _____2_____ year(s) from the date of acceptance and Principal will do all necessary backfilling that may arise on account of sunken conditions in ditches, or otherwise, and do and perform all necessary work and repair any defective condition growing out of or arising from the improper laying or construction of same, or on account of any breaking of same caused by said CONTRACTOR in construction of same , or on account of any defect arising in any of said work laid or constructed by said CONTRACTOR or on account of improper excavation or backfilling, it being understood that the purpose of this section is to cover all defective conditions arising by reason of defective materials, work or labor performed by said CONTRACTOR, then this obligation shall be void; otherwise, to remain in full force and effect; and in case said CONTRACTOR shall fail to do so, it is agree that the OWNER may do said work and supply such materials and charge the same against said CONTRACTOR and Surety on this obligation. Provided further, that if any legal action be filed on this Bond, venue shall lie in Johnson County, Texas.

"PROVIDED, HOWEVER, that said Surety, for value received, stipulates and agrees the bond shall automatically be increased by the amount of any Change Order or supplemental agreement which increases the Contract price with or without notice to the Surety and that no change, extension of time, alteration or addition to the terms of the Contract, or to the work performed thereunder, or the plans specifications, or drawings accompanying the same shall in any way affect its obligation on this bond, and it does hereby waive notice of any such change, extension of time, alteration, or addition to the terms of the Contract or to the work to be performed thereunder.

The undersigned and designated agent is hereby designated by Surety herein as the agent resident to whom any requisite notice may be delivered and on whom service of process may be had in matters arising out of such suretyship.

IN WITNESS WHEREOF, the said Principal and Surety have signed and sealed this instrument this _____day of_____ 20____ .

WITNESS

_____

PRINCIPAL

_____

Printed/Typed Name_____
Title:_____
Company:_____
_____
Address:_____
_____

WITNESS

_____

SURETY

_____

Printed/Typed Name _____
Title: _____
Company: _____
_____
Address: _____
_____

The Resident Agent of the Surety for delivery of notice and service of process is:
Name: _____
Address: _____
Phone Number: _____

Note: Date of Bond must NOT be prior to date of contract.

Revised 11/2008

(This page is intentionally left blank)

LOCATION AND PLAN SHEETS

PROPOSED WATERLINE IMPROVEMENTS
FM 4 & CR 1121
FOR
JOHNSON COUNTY SUD
JOHNSON COUNTY, TEXAS
OCTOBER 2020

DBI ENGINEERS

Daniel & Brown Inc.
118 McKinney St.
P.O. Box 606
Farmersville, Texas 75442
Phone 972-784-7777
WWW.DBIENGINEERS.COM
Firm Registration No.: F-002225

STATE OF TEXAS
EDDY W. DANIEL
72181
REGISTERED PROFESSIONAL ENGINEER
10/ 23/ 2020

GENERAL NOTES:

1. ALL CONSTRUCTION SHALL BE IN ACCORDANCE WITH THE JOHNSON COUNTY SUD AND THE NORTH CENTRAL TEXAS COUNCIL OF GOVERNMENTS (NCTCOG) STANDARD SPECIFICATIONS FOR THE PUBLIC WORKS CONSTRUCTION OR AS AMENDED.
2. ALL RULES & REGULATIONS OF THE TEXAS COMMISSION ON ENVIRONMENTAL QUALITY (TCEQ) FOR THE INSTALLATION OF WATER LINES SHALL BE MET.
3. ALL WATER LINE CROSSINGS OF SANITARY SEWER LINES SHALL BE AS SHOWN IN THE PLANS AND MEET TCEQ REQUIREMENTS.
4. PIPES 16" IN DIAMETER AND SMALLER SHALL BE POLYVINYL CHLORIDE (P.V.C.) (AWWA C900 DR 18).
5. PIPES LARGER THAN 16" IN DIAMETER SHALL BE DUCTILE IRON PIPE (AWWA C151 CLASS 50).
6. ALL VALVES ON PIPES 16" AND SMALLER SHALL BE RESILIENT SEALED WEDGE VALVES (AWWA C509).
7. ALL VALVES ON PIPES LARGER THAN 16" BUT SMALLER THAN 30" SHALL BE BUTTERFLY VALVES (AWWA C504) OR RESILIENT SEALED WEDGE VALVES (AWWA C509).
8. ALL VALVES ON PIPES 30" AND LARGER SHALL BE BUTTERFLY VALVES (AWWA C504).
9. EMBEDMENT SHALL BE AS SHOWN IN THE PLANS. BACKFILL WITHIN THE LIMITS OF EXISTING AND PROPOSED PAVEMENT SHALL BE COMPACTED TO 95% STANDARD PROCTOR, IN LIFTS NO LARGER THAN 12". BACKFILL OUTSIDE THE LIMITS OF EXISTING AND PROPOSED PAVEMENT SHALL BE COMPACTED TO MINIMUM OF 92% STANDARD PROCTOR. ALL COMPACTION SHALL BE BY MECHANICAL METHODS.
10. WATER LINES SHALL BE PRESSURE TESTED IN ACCORDANCE WITH NCTCOG ITEM 506.
11. ALL HORIZONTAL AND VERTICAL BENDS SHALL BE BLOCKED.
12. ALL VALVES AND FITTINGS SHALL BE PROPERLY RESTRAINED WITH MEGA-LUGS OR APPROVED EQUIVALENT. VALVES AND FITTINGS SHALL BE DOMESTIC.
13. ALL FIRE HYDRANTS SHALL BE INSTALLED WITH A 24"x24" SQUARE REINFORCED CONCRETE PAD.
14. ALL WATER LINES SHALL BE SWABBED IN THE PRESENCE OF THE INSPECTOR PRIOR TO BACKFILLING.
15. WATER LINES SHALL BE INSTALLED WITH A MINIMUM OF 42 INCHES OF COVER.
16. WATER LINES AND/OR ROAD CROSSINGS WHICH MAY BE INSTALLED ON PUBLIC RIGHT OF WAYS SHALL BE SUBJECT TO APPLICABLE STATE, COUNTY OR CITY REGULATIONS. ROAD CROSSINGS SHALL BE ENCASED ACCORDING TO STATE, COUNTY OR CITY REGULATIONS.
17. EXISTING WATER LINES SHALL REMAIN IN SERVICE DURING CONSTRUCTION OF NEW WATER LINES.
18. EXISTING UTILITIES SHALL BE LOCATED, IDENTIFIED, AND PROTECTED DURING THE INSTALLATION OF THE NEW WATER LINE.
19. WATER LINES MAY NOT BE BACK FILLED UNTIL INSPECTED AND APPROVED BY A DISTRICT REPRESENTATIVE.
20. NEW WATER LINES SHALL BE TESTED, DISINFECTED, AND FLUSHED IN ACCORDANCE WITH TCEQ REQUIREMENTS INCLUDING TAKING THE REQUIRED NUMBER OF BACTERIOLOGICAL SAMPLES WHICH INDICATE PROPER DISINFECTION BEFORE THE WATER LINE CAN BE PLACED INTO SERVICE.
21. THE WATER LINE MATERIALS AND INSTALLATION SHALL BE GUARANTEED BY THE CONTRACTOR FOR A MINIMUM PERIOD OF ONE YEAR FROM THE DATE OF FINAL ACCEPTANCE.
22. THE JOHNSON COUNTY SUD SHALL BE HELD HARMLESS FROM ANY DAMAGES OCCURRING DURING THE CONSTRUCTION OR WARRANTY PERIOD. ALL DAMAGES AS A RESULT OF THE WATER LINE CONSTRUCTION SHALL BE THE RESPONSIBILITY OF THE CONTRACTOR.
23. STEEL CASING SHALL BE INSTALLED UNDER STATE ROADS & PVC CASING UNDER COUNTY/CITY ROADS. A ROAD BORE PERMIT MUST BE DISPLAYED AND AVAILABLE FOR INSPECTION AS REQUIRED.
24. WATER LINES SHALL BE INSTALLED IN ACCORDANCE WITH TEXAS COMMISSION ON ENVIRONMENTAL QUALITY (TCEQ) WATER DISTRIBUTION SYSTEM GENERAL CONSTRUCTION NOTES.
25. WATER LINES SHALL BE INSTALLED IN ACCORDANCE WITH THE FOLLOWING DANIEL & BROWN, INC. SPECIFICATIONS : 205-WATER LINE INSTALLATION, 201-EARTHWORK, 1002-TRENCH EVACUATION SAFETY SYSTEMS UNLESS OTHERWISE NOTED IN THESE PLANS.
26. DURING INSTALLATION A MINIMUM SEPARATION DISTANCE SHALL BE MAINTAINED IN ALL DIRECTIONS OF NINE FEET BETWEEN THE PROPOSED WATERLINE AND WASTE WATER COLLECTION FACILITIES, INCLUDING MANHOLES AND SEPTIC TANK DRAINFIELDS. IF THIS DISTANCE CANNOT BE MAINTAINED, THE INSTALLER SHALL IMMEDIATELY NOTIFY THE ENGINEER FOR FURTHER DIRECTION. SEPARATION DISTANCES, INSTALLATION METHODS, AND MATERIALS UTILIZED SHALL MEET 290.44 OF THE TCEQ RULES. NO COVERING OF LINES ALLOWED, UNTIL INSPECTED BY ENGINEER'S REPRESENTATIVE.
27. WATERLINE ENCASEMENT FOR THE PURPOSES OF A GAS LINE CROSSING SHALL BE IN ACCORDANCE WITH GAS LINE OWNER'S SPECIFICATIONS.
28. CASING SPACERS AND END CAPS ARE REQUIRED. CASING SPACERS SHALL BE INSTALLED AT LEAST EVERY 8 FEET AND FOR WATERLINES EQUAL TO OR GREATER THAN 2 INCHES.
29. CONTRACTOR SHALL PROVIDE ALL METER SETTINGS. OWNER SHALL PROVIDE WATER METERS.
30. ALL BORE PITS OR OPEN EXCAVATION SHALL BE CLOSED THE SAME DAY THEY ARE OPENED IF AT ALL POSSIBLE. ANY PIT OR EXCAVATION LEFT OPEN OVERNIGHT SHALL BE BARRICADED. TEXAS DEPARTMENT OF TRANSPORTATION (TXDOT) RULES AND REGULATIONS SHALL APPLY FOR STATE RIGHT OF WAY APPLICATIONS.
31. WATER METERS SHALL NOT BE PLACED ON ROADWAY RIGHT-OF-WAY.
32. WATER LINES, CROSSING BENEATH THE PROPOSED ROADWAY SURFACE, SHALL MAINTAIN A MINIMUM CLEARANCE OF 42 INCHES (60 INCHES FOR TXDOT) BETWEEN THE BOTTOM OF THE PAVEMENT STRUCTURE AND THE WATER LINE/ENCASEMENT.
33. FIRE HYDRANTS SHALL BE PAINTED. COLOR SELECTION SHALL BE IN ACCORDANCE WITH TCEQ REQUIREMENTS. COLOR SELECTION AND PAINT TYPE SHALL BE APPROVED BY JOHNSON COUNTY SUD.
34. TRACER WIRE SHALL BE INCLUDED FOR ALL WATER LINE IN ACCORDANCE WITH DANIEL & BROWN, INC. SPECIFICATION 205, WATER LINE INSTALLATION.
35. THE CONTRACTOR SHALL SUPPLY ALL EQUIPMENT NECESSARY TO SUCCESSFULLY CONDUCT ALL WATER TESTS, INCLUDING BUT NOT LIMITED TO, TEST PORTS, SAMPLE CONTAINERS, PUMPS, EXTERNAL WATER LIE, EXTERNAL HOSES, ETC.
36. THE CUSTOMER OR CUSTOMER'S REPRESENTATIVE SHALL HAVE THE OPTION TO WITNESS ANY TESTS DONE IN CONNECTION WITH THE PROJECT.
37. ALL THIRD PARTY TEST FACILITIES, USED IN CONNECTION WITH THE PROJECT, WILL BE APPROVED BY JOHNSON COUNTY SUD BEFORE THEY ARE UTILIZED.
38. CONTRACTOR SHALL BE RESPONSIBLE FOR STREET AND DRIVEWAY REPAIRS AND PROPER DISPOSAL OF EXCAVATED MATERIALS AND CONSTRUCTION DEBRIS.
39. IN THE EVENT OF A DISCREPANCY BETWEEN SPECIFICATIONS, JOHNSON COUNTY SUD SPECIFICATIONS WILL TAKE PRECEDENCE.

Daniel & Brown Inc.
118 McKinney St.
P.O. Box 606
Farmersville, Texas 75442
Phone 972-784-7777
WWW.DBIENGINEERS.COM
FIRM REGISTRATION NO.: F-002225

DBI ENGINEERS

DESIGNED: E.W.D.
DRAWN: M.K.W.
DATE: 09/03/20
REVISION: N/C
FILE: N:\Johnson Co SUD\WL-JCSUD TxCDBG-1018\AutoCAD\FM 4 WL

STATE OF TEXAS
EDDY W. DANIEL
72181
REGISTERED PROFESSIONAL ENGINEER
10/23/2020

PROPOSED 6" WATERLINE ON FM 4
FOR
JOHNSON COUNTY SUD
JOHNSON COUNTY, TEXAS

GENERAL NOTES

GENERAL NOTES

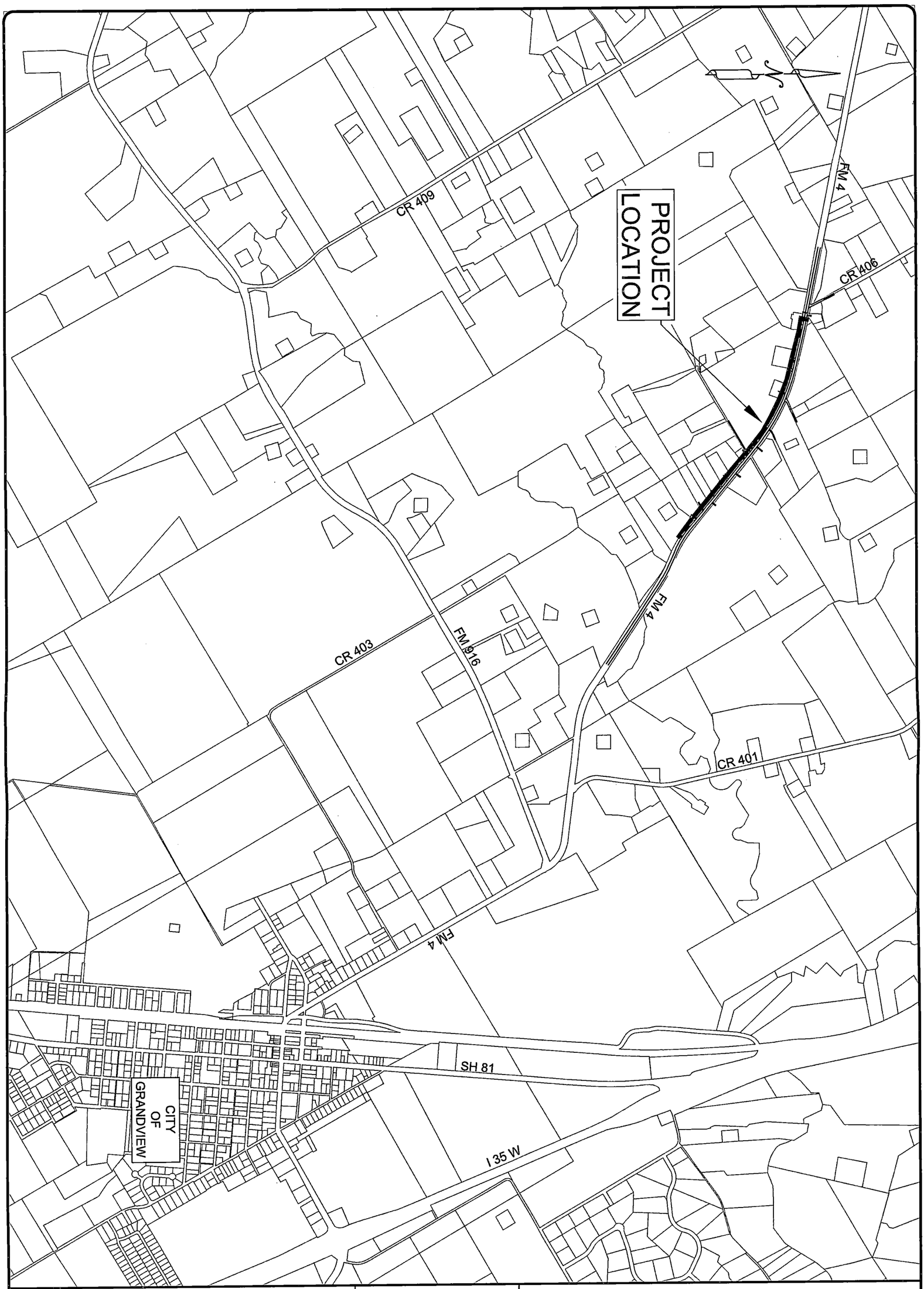

SHEET 1 OF 23

PROPOSED 6" WATERLINE ON FM 4
FOR
JOHNSON COUNTY SUD
JOHNSON COUNTY, TEXAS

VICINITY MAP

STATE OF TEXAS
EDDY W. DANIEL
72181
REGISTERED PROFESSIONAL ENGINEER
10/ 23/ 2020

DBI ENGINEERS

Daniel & Brown Inc.
118 McKinney St.
P.O. Box 606
Farmersville, Texas 75442
Phone 972-784-7777
WWW.DBIENGINEERS.COM

DESIGNED: E.W.D.	DATE: 09/03/20	FIRM REGISTRATION NO.: F-002225
DRAWN: M.K.W.	REVISION: N/C	
FILE: N:\Johnson Co SUD\WL-JCSUD TxCDBG-1018\AutoCAD\FM 4 WL		

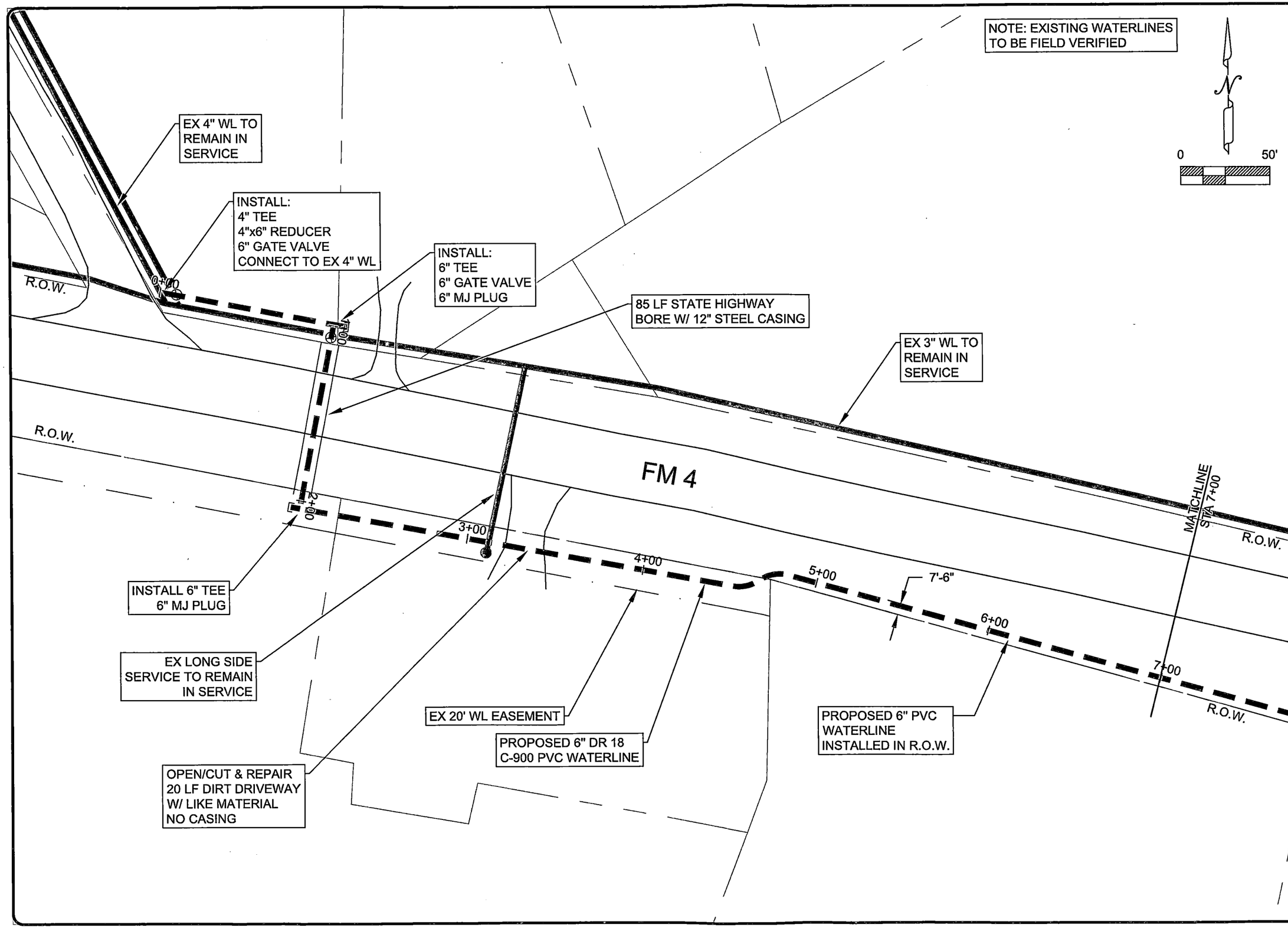

Daniel & Brown Inc.
118 McKinney St.
P.O. Box 606
Farmersville, Texas 75442
Phone 972-784-7777
WWW.DBIENGINEERS.COM

FIRM REGISTRATION NO.: F-002225

DBI ENGINEERS

DESIGNED: E.W.D.
DRAWN: M.K.W.
DATE: 09/03/20
REVISION: N/C
FILE: N:\Johnson Co SUD\WL-JCSUD TxCDBG-1018\AutoCAD\FM 4 WL

STATE OF TEXAS
EDDY W. DANIEL
72181
REGISTERED PROFESSIONAL ENGINEER
10/23/2020

PROPOSED 6" WATERLINE ON FM 4
FOR
JOHNSON COUNTY SUD
JOHNSON COUNTY, TEXAS

PLAN SHEET STA 0+00 - 7+00

NOTE: EXISTING WATERLINES TO BE FIELD VERIFIED

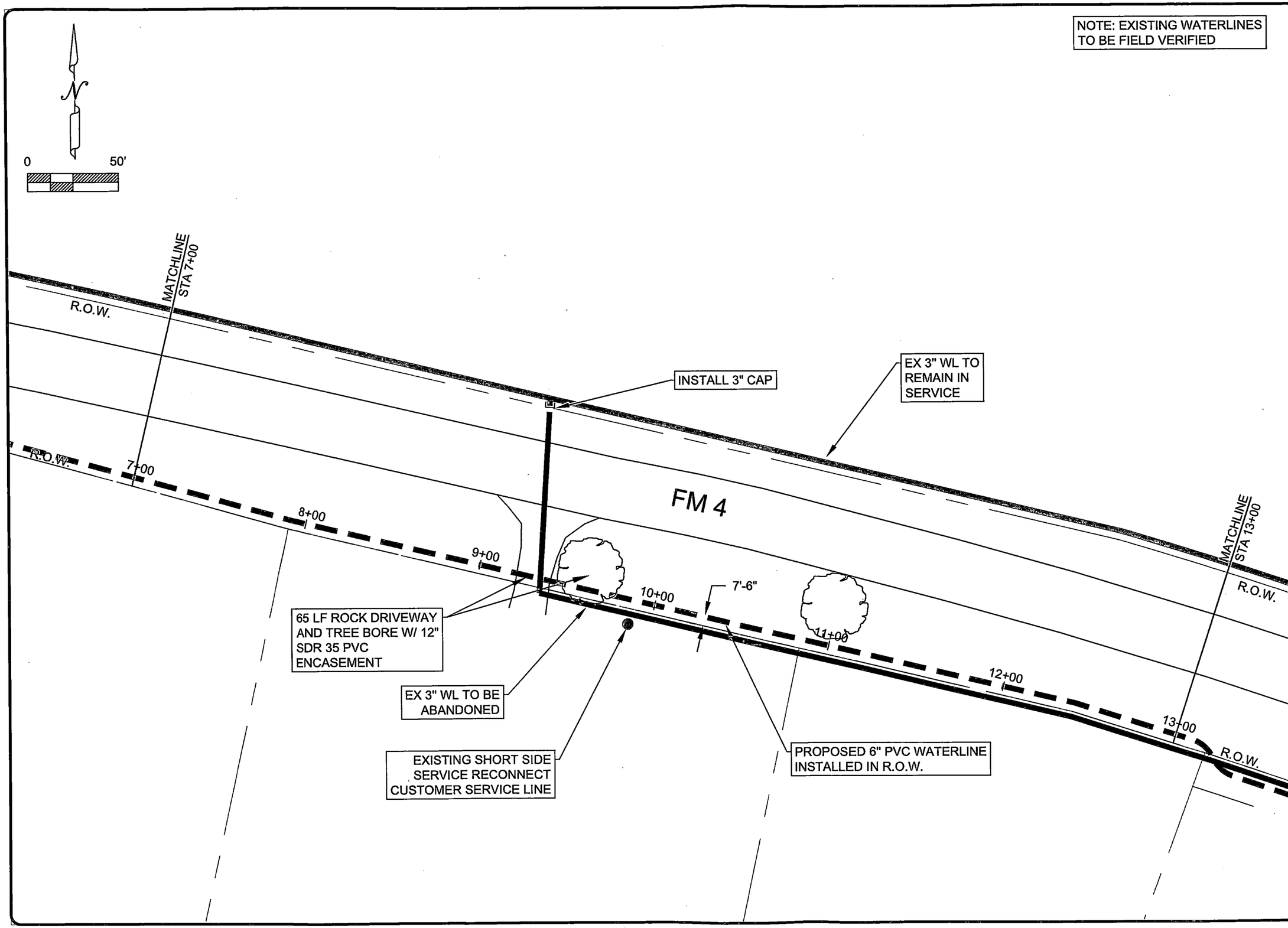

Daniel & Brown Inc.
118 McKinney St.
P.O. Box 606
Farmersville, Texas 75442
Phone 972-784-7777
WWW.DBIENGINEERS.COM

DBI ENGINEERS

FIRM REGISTRATION NO.: F-002225

DESIGNED: E.W.D.
DRAWN: M.K.W.
DATE: 09/03/20
REVISION: N/C
FILE: N:\Johnson Co SUD\WL-JCSUD TxCDBG-1018\AutoCAD\FM 4 WL

STATE OF TEXAS
EDDY W. DANIEL
72181
REGISTERED PROFESSIONAL ENGINEER
10/ 23/ 2020

PROPOSED 6" WATERLINE ON FM 4
FOR
JOHNSON COUNTY SUD
JOHNSON COUNTY, TEXAS

PLAN SHEET STA 7+00 - 13+00

NOTE: EXISTING WATERLINES TO BE FIELD VERIFIED

EX 3" WL TO REMAIN IN SERVICE

MATCHLINE STA 13+00

R.O.W.

EX 3" WL TO BE ABANDONED

BROWN TRAIL

12+00

R.O.W.

13+00

EX 2" WL TO REMAIN IN SERVICE

14+00

FM 4

15+00

PROPOSED 6" DR 18 C-900 PVC WATERLINE

EX 20' WL EASEMENT

16+00

7'-6"

EXISTING SHORT SIDE SERVICE RECONNECT CUSTOMER SERVICE LINE

17+00

OPEN/CUT & REPAIR 20 LF ROCK DRIVEWAY W/ LIKE MATERIAL NO CASING

R.O.W.

INSTALL 6"x2" TAPPING SADDLE 2" FIPT GATE VALVE CONNECT EX 2" WL TO PROP 6" WL

18+00

19+00

PROPOSED 6" PVC WATERLINE INSTALLED IN R.O.W.

R.O.W.

CONNNECT EX LONG SIDE SERVICE LINE TO PROP 6" WL

MATCHLINE STA 19+00

N

0 50'

Daniel & Brown Inc.
118 McKinney St.
P.O. Box 606
Farmersville, Texas 75442
Phone 972-784-7777
WWW.DBIENGINEERS.COM

FIRM REGISTRATION NO.: F-002225

DBI ENGINEERS

DESIGNED: E.W.D.
DRAWN: M.K.W.
DATE: 09/03/20
REVISION: N/C
FILE: N:\Johnson Co SUD\WL-JCSUD TxCDBG-1018\AutoCAD\FM 4 WL

STATE OF TEXAS
EDDY W. DANIEL
72181
REGISTERED PROFESSIONAL ENGINEER
10/23/2020

PROPOSED 6" WATERLINE ON FM 4
FOR
JOHNSON COUNTY SUD
JOHNSON COUNTY, TEXAS

PLAN SHEET STA 13+00 - 19+00

NOTE: EXISTING WATERLINES TO BE FIELD VERIFIED

R.O.W.

MATCHLINE STA 19+00

R.O.W.

19+00

20+00

21+00

22+00

23+00

24+00

25+00

FM 4

CONNNECT EX LONG SIDE SERVICE LINE TO PROP 6" WL

7'-6"

EX 3" WL TO BE ABANDONED

PROPOSED 6" PVC WATERLINE INSTALLED IN R.O.W.

CONNNECT EX LONG SIDE SERVICE LINE TO PROP 6" WL

MATCHLINE STA 25+00

R.O.W.

R.O.W.

N

0 50'

Daniel & Brown Inc.
118 McKinney St.
P.O. Box 606
Farmersville, Texas 75442
Phone 972-784-7777
WWW.DBIENGINEERS.COM

FIRM REGISTRATION NO.: F-002225

DBI ENGINEERS

DESIGNED: E.W.D.
DRAWN: M.K.W.
DATE: 09/03/20
REVISION: N/C
FILE: N:\Johnson Co SUD\WL-JCSUD TxCDBG-1018\AutoCAD\FM 4 WL

STATE OF TEXAS
EDDY W. DANIEL
72181
REGISTERED PROFESSIONAL ENGINEER
10/23/2020

PROPOSED 6" WATERLINE ON FM 4
FOR
JOHNSON COUNTY SUD
JOHNSON COUNTY, TEXAS

PLAN SHEET STA 19+00 - 25+00

NOTE: EXISTING WATERLINES TO BE FIELD VERIFIED

MATCHLINE STA 25+00

R.O.W.

35 LF COUNTY ROAD BORE W/ 12" SDR 35 PVC ENCASEMENT

INSTALL:
6"x2" TAPPING SADDLE
2" GATE VALVE
2"x1" REDUCER
CONNECT TO EX 1" WL

OPEN/CUT & REPAIR
20 LF ROCK DRIVEWAY
W/ LIKE MATERIAL
NO CASING

R.O.W.

25+00

7'-6"

CR303

26+00

EX 1" WL TO REMAIN IN SERVICE

EX 3" WL TO BE ABANDONED

CONNNECT EX LONG SIDE SERVICE LINE TO PROP 6" WL

27+00

EXISTING SHORT SIDE SERVICE RECONNECT CUSTOMER SERVICE LINE

OPEN/CUT & REPAIR
65 LF ROCK DRIVEWAY
W/ LIKE MATERIAL
NO CASING

28+00

FM 4

EXISTING SHORT SIDE SERVICE RECONNECT CUSTOMER SERVICE LINE

PROPOSED 6" DR 18
C-900 PVC WATERLINE

29+00

EX 15' WL EASEMENT

30+00

MATCHLINE STA 31+00

EXISTING SHORT SIDE SERVICE RECONNECT CUSTOMER SERVICE LINE

OPEN/CUT & REPAIR
20 LF ROCK DRIVEWAY
W/ LIKE MATERIAL
NO CASING

31+00

R.O.W.

R.O.W.

N

0 50'

Daniel & Brown Inc.
118 McKinney St.
P.O. Box 606
Farmersville, Texas 75442
Phone 972-784-7777
WWW.DBIENGINEERS.COM

FIRM REGISTRATION NO.: F-002225

DBI ENGINEERS

DESIGNED: E.W.D.
DRAWN: M.K.W.
DATE: 09/03/20
REVISION: N/C
FILE: N:\Johnson Co SUD\WL-JCSUD TxCDBG-1018\AutoCAD\FM 4 WL

STATE OF TEXAS
EDDY W. DANIEL
72181
REGISTERED PROFESSIONAL ENGINEER
10/23/2020

PROPOSED 6" WATERLINE ON FM 4
FOR
JOHNSON COUNTY SUD
JOHNSON COUNTY, TEXAS

PLAN SHEET STA 25+00 - 31+00

NOTE: EXISTING WATERLINES TO BE FIELD VERIFIED

R.O.W.

R.O.W.

MATCHLINE STA 31+00

31+00

32+00

33+00

34+00

35+00

36+00

37+00

38+00

FM 4

40 LF CONCRETE DRIVEWAY BORE W/ 12" SDR 35 PVC ENCASEMENT

EXISTING SHORT SIDE SERVICE RECONNECT CUSTOMER SERVICE LINE

OPEN/CUT & REPAIR 20 LF ROCK DRIVEWAY W/ LIKE MATERIAL NO CASING

EXISTING SHORT SIDE SERVICE RECONNECT CUSTOMER SERVICE LINE

PROPOSED 6" DR 18 C-900 PVC WATERLINE

15' WL EASEMENT

EX 2" WL TO BE ABANDONED

7'-6"

EXISTING SHORT SIDE SERVICE RECONNECT CUSTOMER SERVICE LINE

EX 20' WL EASEMENT

CONNNECT EX LONG SIDE SERVICE LINE TO PROP 6" WL

PROPOSED 6" PVC WATERLINE INSTALLED IN R.O.W.

OPEN/CUT & REPAIR 20 LF ROCK DRIVEWAY W/ LIKE MATERIAL NO CASING

MATCHLINE STA 37+00

R.O.W.

R.O.W.

N

0 50'

Daniel & Brown Inc.
118 McKinney St.
P.O. Box 606
Farmersville, Texas 75442
Phone 972-784-7777
WWW.DBIENGINEERS.COM

FIRM REGISTRATION NO.: F-002225

DBI ENGINEERS

DESIGNED: E.W.D.
DRAWN: M.K.W.
DATE: 09/03/20
REVISION: N/C
FILE: N:\Johnson Co SUD\WL-JCSUD TxCDBG-1018\AutoCAD\FM 4 WL

STATE OF TEXAS
EDDY W. DANIEL
72181
REGISTERED PROFESSIONAL ENGINEER
10/23/2020

PROPOSED 6" WATERLINE ON FM 4
FOR
JOHNSON COUNTY SUD
JOHNSON COUNTY, TEXAS

PLAN SHEET STA 31+00 - 37+00

NOTE: EXISTING WATERLINES TO BE FIELD VERIFIED

R.O.W.

R.O.W.

(5) EXISTING SHORT SIDE SERVICE RECONNECT CUSTOMER SERVICE LINE

MATCHLINE STA 37+00

37+00

38+00

39+00

40+00

41+00

42+00

FM 4

OPEN/CUT & REPAIR 20 LF ASPHALT DRIVEWAY W/ LIKE MATERIAL NO CASING

OPEN/CUT & REPAIR 20 LF ROCK DRIVEWAY W/ LIKE MATERIAL NO CASING

EX 2" WL TO BE ABANDONED

PROPOSED 6" DR 18 C-900 PVC WATERLINE

EX 20' WL EASEMENT

INSTALL:
6" GATE VALVE
6"x2" TAPPED PLUG
CONNECT TO EX 2" WL

EX 2" WL TO REMAIN IN SERVICE

R.O.W.

R.O.W.

N

0 50'

Daniel & Brown Inc.
118 McKinney St.
P.O. Box 606
Farmersville, Texas 75442
Phone 972-784-7777
WWW.DBIENGINEERS.COM

FIRM REGISTRATION NO.: F-002225

DBI ENGINEERS

DESIGNED: E.W.D. | DATE: 09/03/20
DRAWN: M.K.W. | REVISION: N/C
FILE: N:\Johnson Co SUD\WL-JCSUD TxCDBG-1018\AutoCAD\FM 4 WL

STATE OF TEXAS
EDDY W. DANIEL
72181
REGISTERED PROFESSIONAL ENGINEER
10/23/2020

PROPOSED 6" WATERLINE ON FM 4
FOR
JOHNSON COUNTY SUD
JOHNSON COUNTY, TEXAS

PLAN SHEET STA 37+00 - 42+00

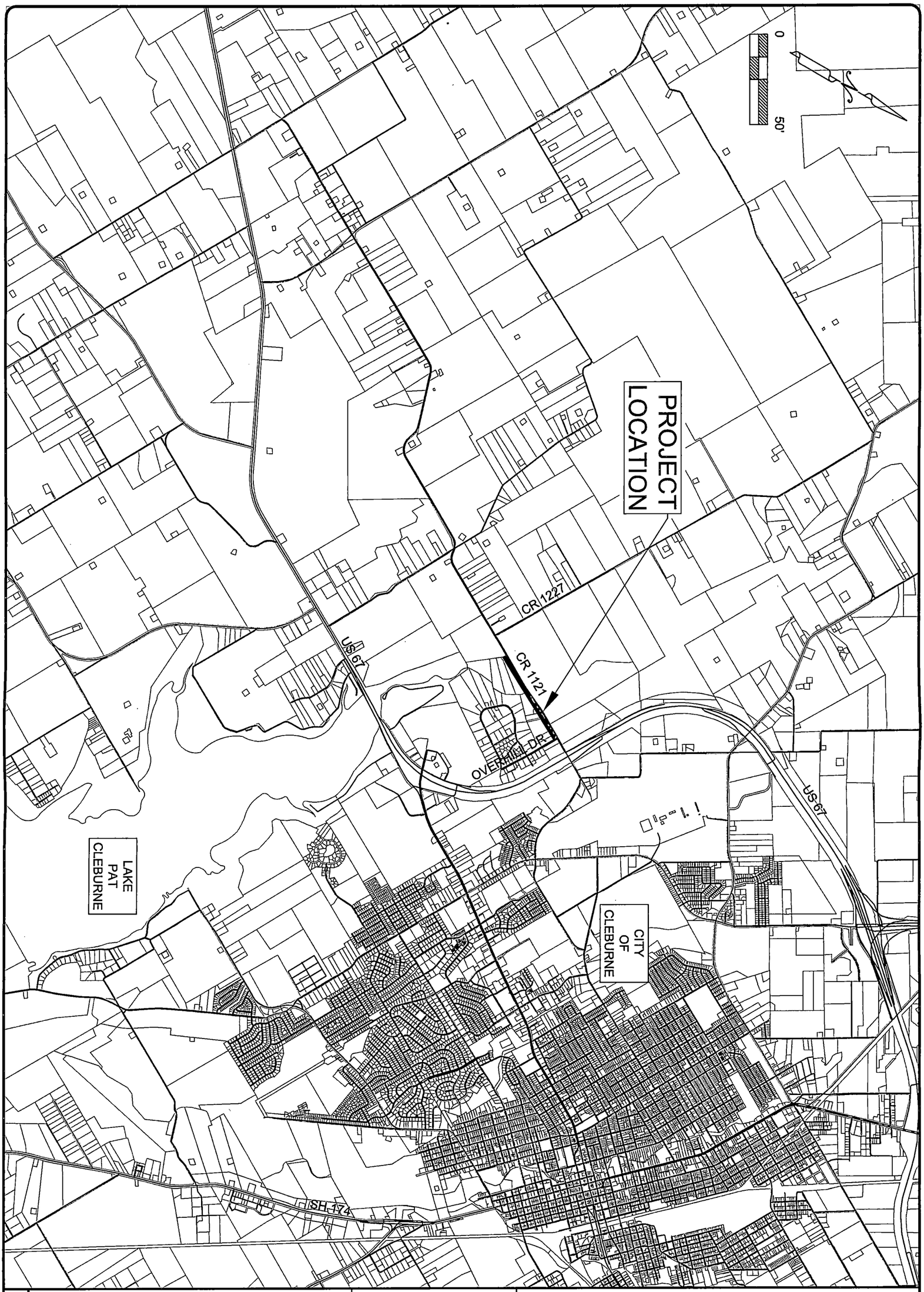

SHEET 9 OF 23

PROPOSED 6" WATERLINE ON CR 1121
FOR
JOHNSON COUNTY SUD
JOHNSON COUNTY, TEXAS

VICINITY MAP

STATE OF TEXAS
EDDY W. DANIEL
72181
REGISTERED PROFESSIONAL ENGINEER
10/25/2020

DBI ENGINEERS

Daniel & Brown Inc.
118 McKinney St.
P.O. Box 606
Farmersville, Texas 75442
Phone 972-784-7777
WWW.DBIENGINEERS.COM

DESIGNED: E.W.D.	DATE: 09/03/20	FIRM REGISTRATION NO.: F-002225
DRAWN: M.K.W.	REVISION: N/C	
FILE: N:\Johnson Co SUD\WL-JCSUD TxCDBG-1018\AutoCAD\CR 1121 WL		

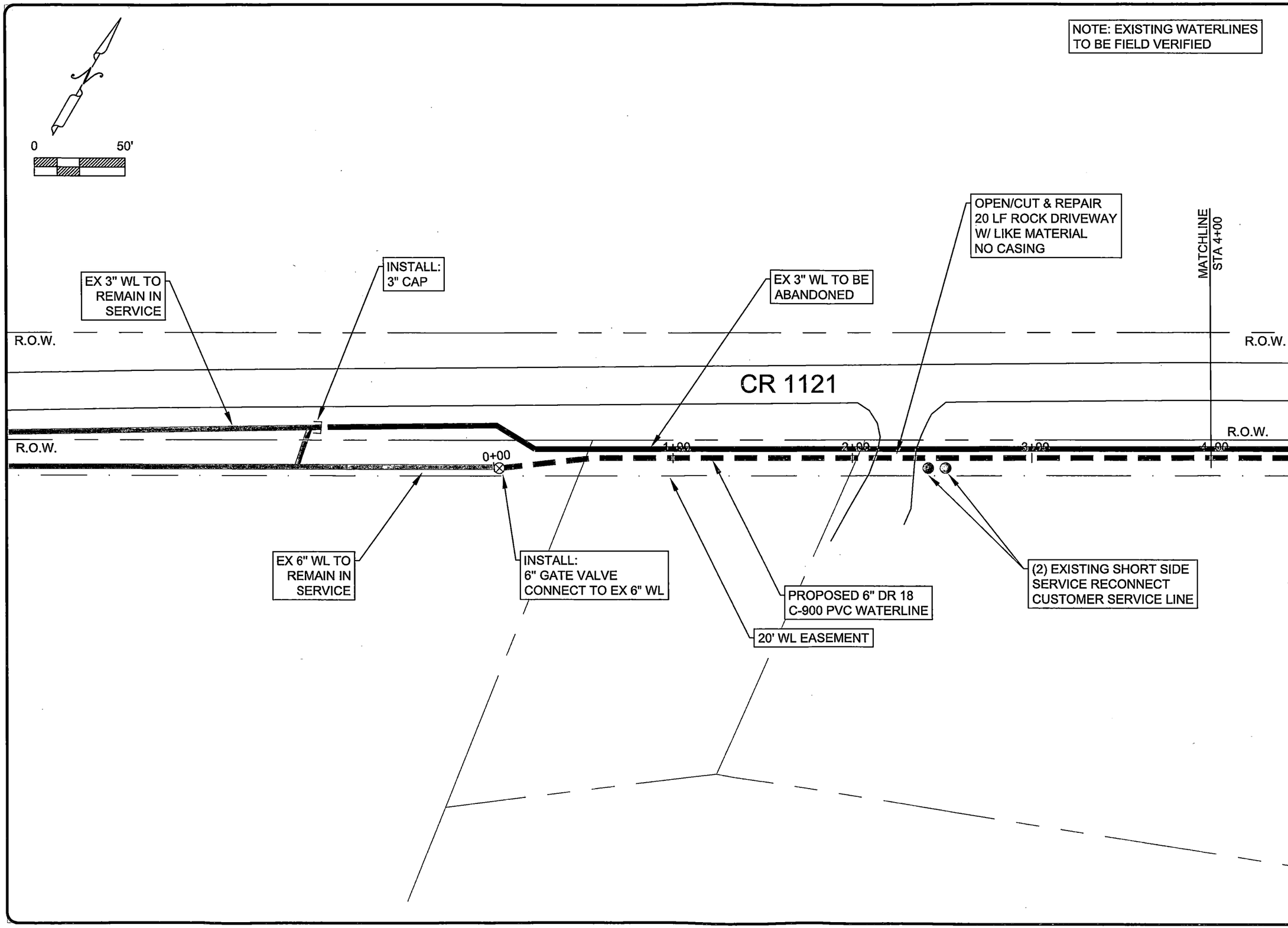

Daniel & Brown Inc.
118 McKinney St.
P.O. Box 606
Farmersville, Texas 75442
Phone 972-784-7777
WWW.DBIENGINEERS.COM

DBI ENGINEERS

FIRM REGISTRATION NO.: F-002225

DATE: 09/03/20
REVISION: N/C
DESIGNED: E.W.D.
DRAWN: M.K.W.
FILE: N:\Johnson Co SUD\WL-JCSUD TxCDBG-1018\AutoCAD\CR 1121 WL

STATE OF TEXAS
EDDY W. DANIEL
72181
REGISTERED PROFESSIONAL ENGINEER
10/23/2020

PROPOSED 6" WATERLINE ON CR 1121
FOR
JOHNSON COUNTY SUD
JOHNSON COUNTY, TEXAS

PLAN SHEET STA 0+00 - 4+00

NOTE: EXISTING WATERLINES TO BE FIELD VERIFIED

0 50'

MATCHLINE STA 4+00

MATCHLINE STA 10+00

EX 3" WL TO BE ABANDONED

40 LF OPEN & CUT CREEK CROSSING

R.O.W.

R.O.W.

CR 1121

R.O.W.

R.O.W.

4+00 5+00 6+00 7+00 8+00 9+00 10+00

PROPOSED 6" DR 18 C-900 PVC WATERLINE

EX 20' WL EASEMENT

Daniel & Brown Inc.
118 McKinney St.
P.O. Box 606
Farmersville, Texas 75442
Phone 972-784-7777
WWW.DBIENGINEERS.COM

DBI ENGINEERS

FIRM REGISTRATION NO.: F-002225

DESIGNED: E.W.D. | DATE: 09/03/20

DRAWN: M.K.W. | REVISION: N/C

FILE: N:\Johnson Co SUD\WL-JCSUD TxCDBG-1018\AutoCAD\CR 1121 WL

STATE OF TEXAS
EDDY W. DANIEL
72181
REGISTERED PROFESSIONAL ENGINEER

10/23/2020

PROPOSED 6" WATERLINE ON CR 1121
FOR
JOHNSON COUNTY SUD
JOHNSON COUNTY, TEXAS

PLAN SHEET STA 4+00 - 10+00

GAS LINE NOTES

- PRIOR TO CONSTRUCTION GAS LINE WILL NEED TO BE SPOTTED
- A MINIMUM OF 2' SEPARATION IS REQUIRED

NOTE: EXISTING WATERLINES TO BE FIELD VERIFIED

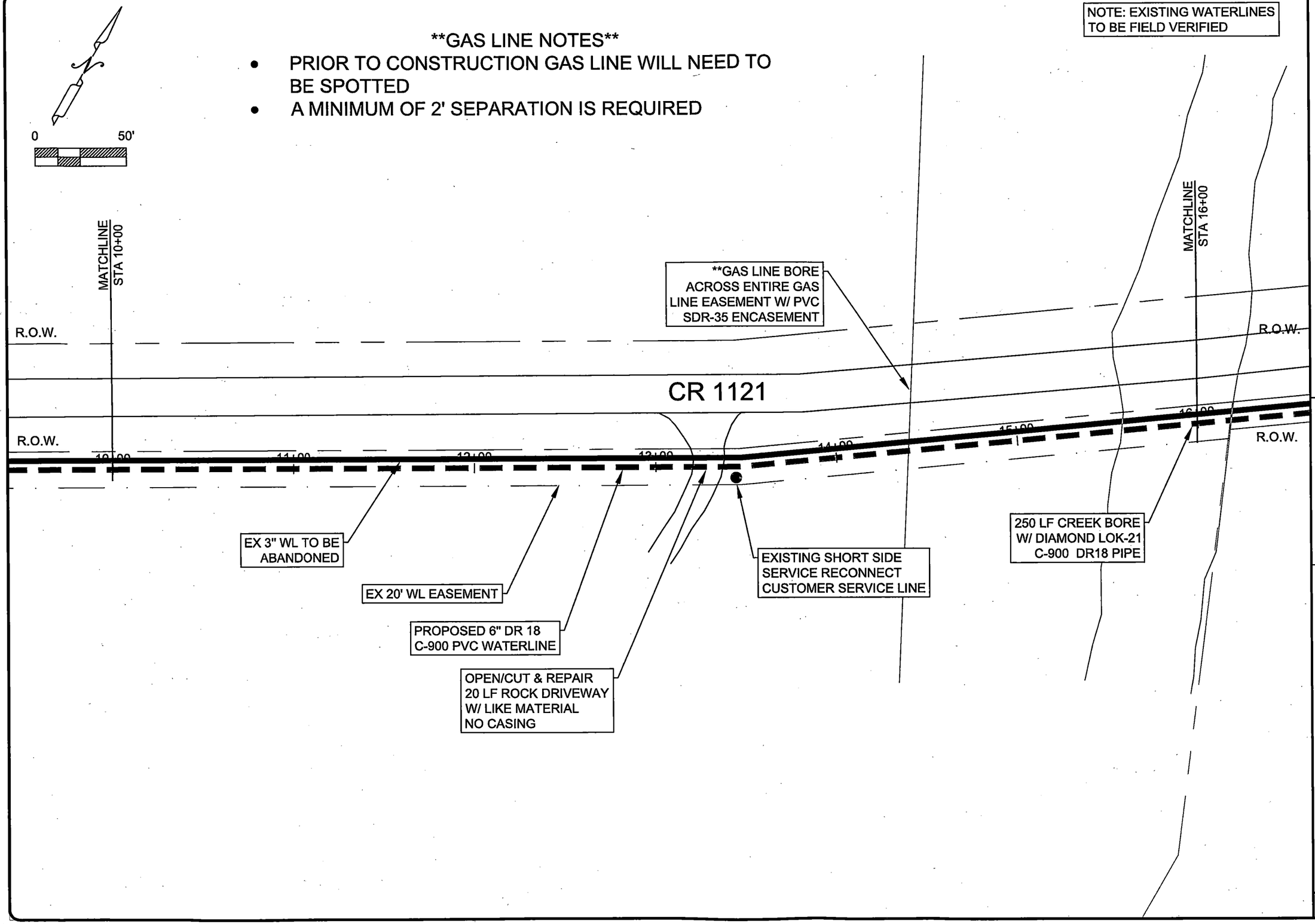

Daniel & Brown Inc.
118 McKinney St.
P.O. Box 606
Farmersville, Texas 75442
Phone 972-784-7777
WWW.DBIENGINEERS.COM

DBI ENGINEERS

FIRM REGISTRATION NO.: F-002225

DATE: 09/03/20
REVISION: N/C
DESIGNED: E.W.D.
DRAWN: M.K.W.
FILE: N:\Johnson Co SUD\WL-JCSUD TxCDBG-1018\AutoCAD\CR 1121 WL

STATE OF TEXAS
EDDY W. DANIEL
72181
REGISTERED PROFESSIONAL ENGINEER
10/23/2020

PROPOSED 6" WATERLINE ON CR 1121
FOR
JOHNSON COUNTY SUD
JOHNSON COUNTY, TEXAS

PLAN SHEET STA 10+00 - 16+00

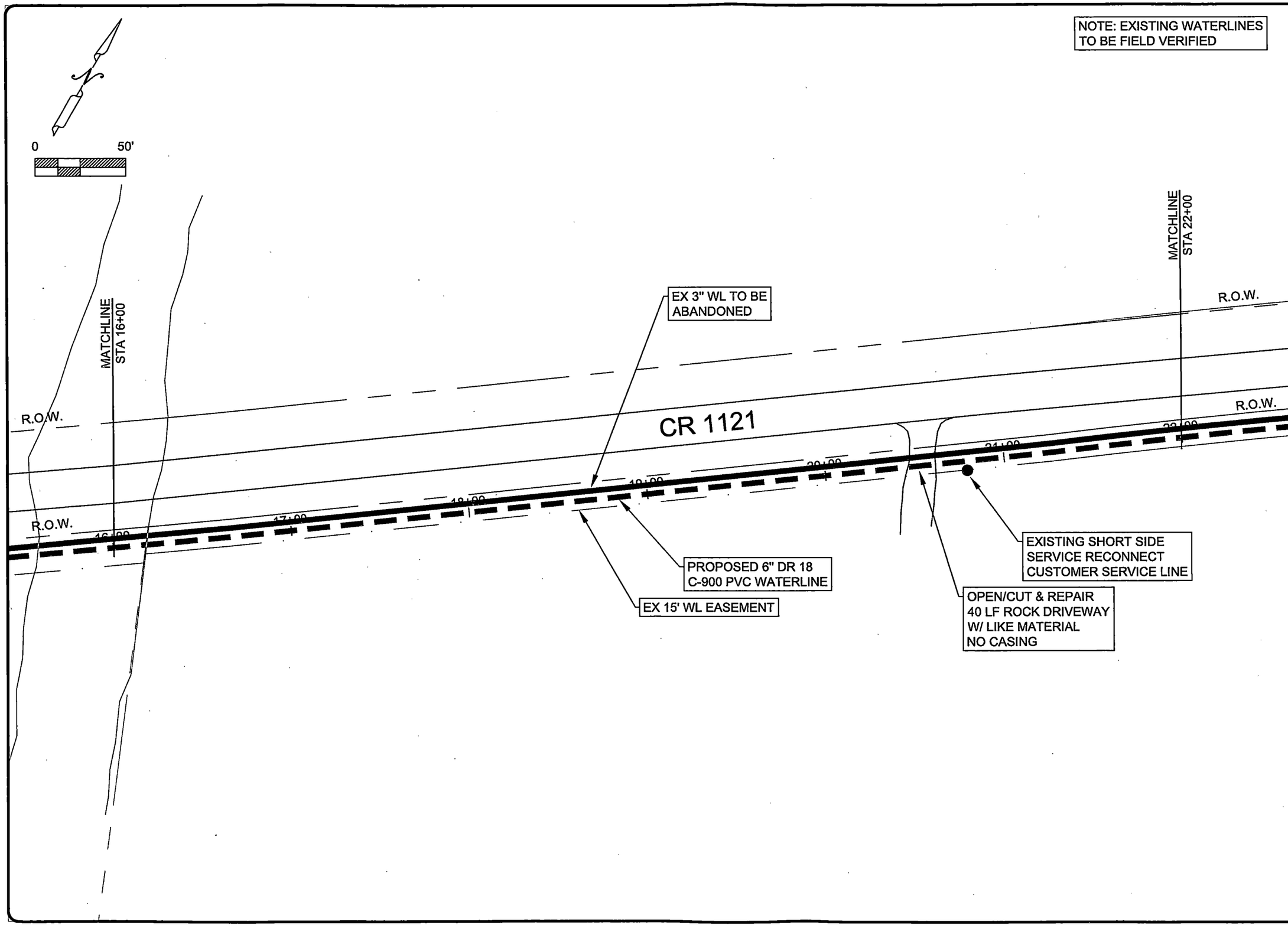

Daniel & Brown Inc.
118 McKinney St.
P.O. Box 606
Farmersville, Texas 75442
Phone 972-784-7777
WWW.DBIENGINEERS.COM

DBI ENGINEERS

FIRM REGISTRATION NO.: F-002225

DATE: 09/03/20
REVISION: N/C

DESIGNED: E.W.D.
DRAWN: M.K.W.
FILE: N:\Johnson Co SUD\WL-JCSUD TxCDBG-1018\AutoCAD\CR 1121 WL

STATE OF TEXAS
EDDY W. DANIEL
72181
REGISTERED PROFESSIONAL ENGINEER
10/ 23/ 2020

PROPOSED 6" WATERLINE ON CR 1121
FOR
JOHNSON COUNTY SUD
JOHNSON COUNTY, TEXAS

PLAN SHEET STA 16+00 - 22+00

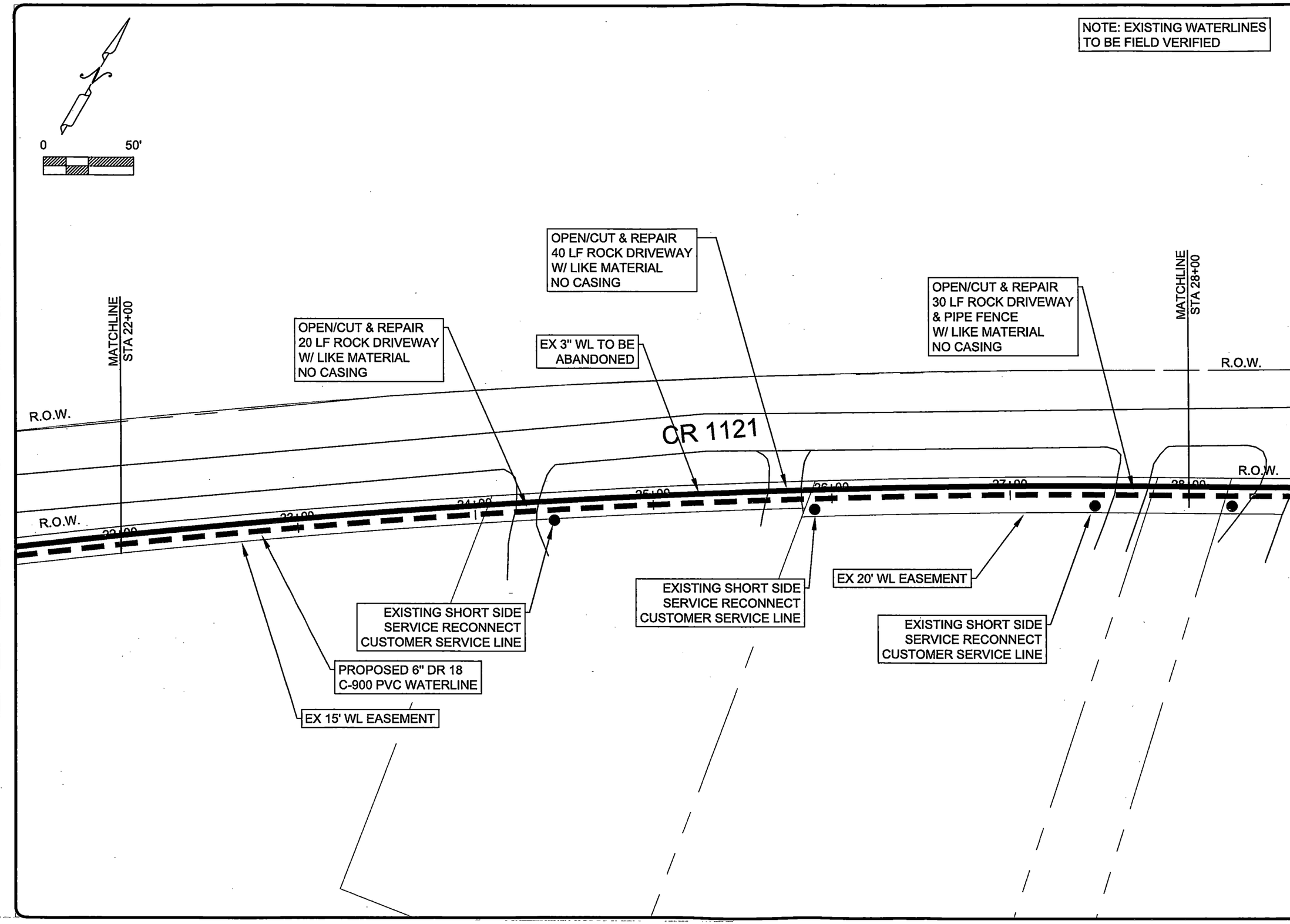

Daniel & Brown Inc.
118 McKinney St.
P.O. Box 606
Farmersville, Texas 75442
Phone 972-784-7777
WWW.DBIENGINEERS.COM

DBI ENGINEERS

FIRM REGISTRATION NO.: F-002225

DESIGNED: E.W.D. | DATE: 09/03/20
DRAWN: M.K.W. | REVISION: N/C
FILE: N:\Johnson Co SUD\WL-JCSUD TxCDBG-1018\AutoCAD\CR 1121 WL

STATE OF TEXAS
EDDY W. DANIEL
72181
REGISTERED PROFESSIONAL ENGINEER
10/23/2020

PROPOSED 6" WATERLINE ON CR 1121
FOR
JOHNSON COUNTY SUD
JOHNSON COUNTY, TEXAS

PLAN SHEET STA 22+00 - 28+00

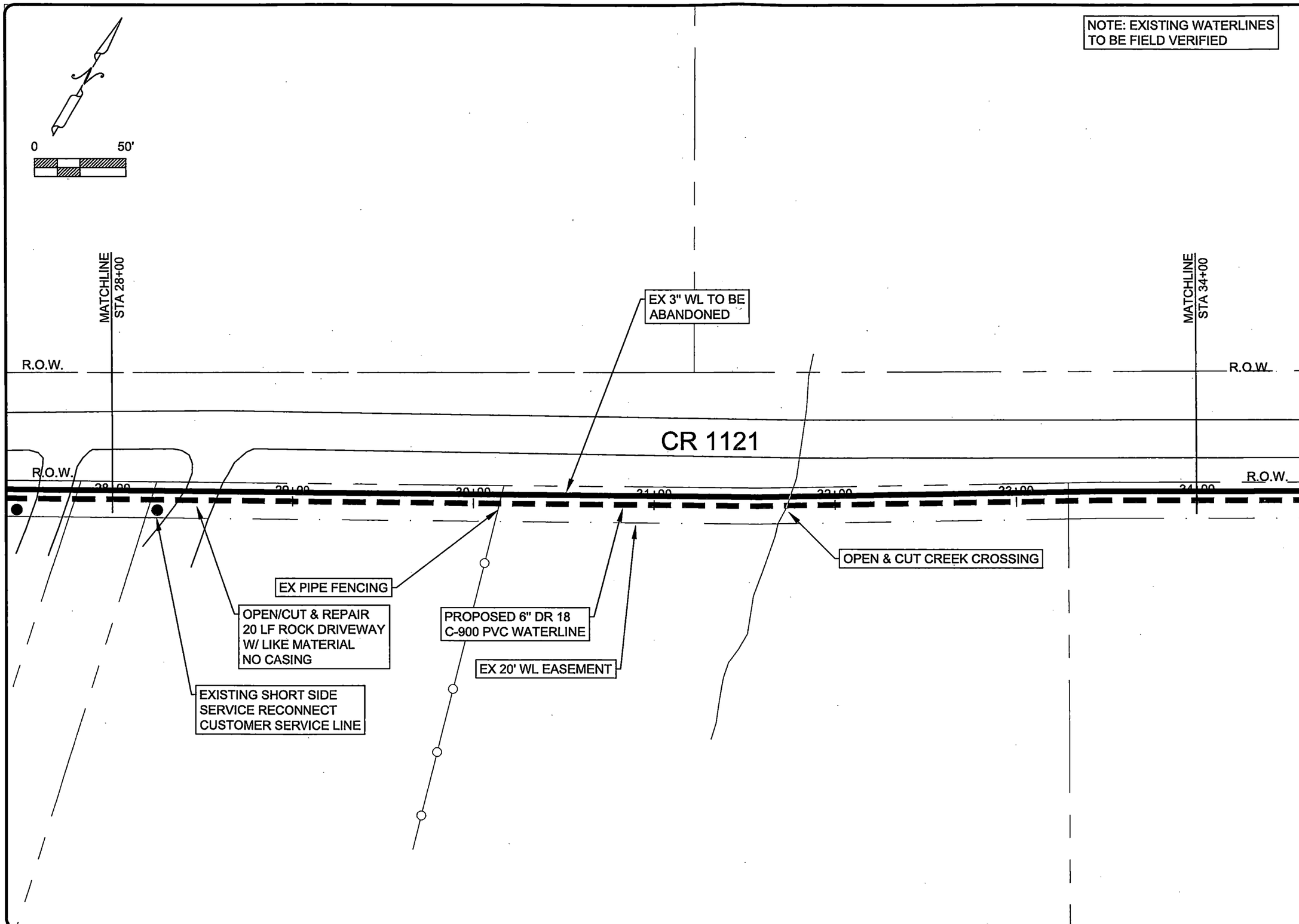

Daniel & Brown Inc.
118 McKinney St.
P.O. Box 606
Farmersville, Texas 75442
Phone 972-784-7777
WWW.DBIENGINEERS.COM

DBI ENGINEERS

FIRM REGISTRATION NO.: F-002225

DESIGNED: E.W.D. | DATE: 09/03/20
DRAWN: M.K.W. | REVISION: N/C
FILE: N:\Johnson Co SUD\WL-JCSUD TxCDBG-1018\AutoCAD\CR 1121 WL

STATE OF TEXAS
EDDY W. DANIEL
72181
REGISTERED PROFESSIONAL ENGINEER
10/23/2020

PROPOSED 6" WATERLINE ON CR 1121
FOR
JOHNSON COUNTY SUD
JOHNSON COUNTY, TEXAS

PLAN SHEET STA 28+00 - 34+00

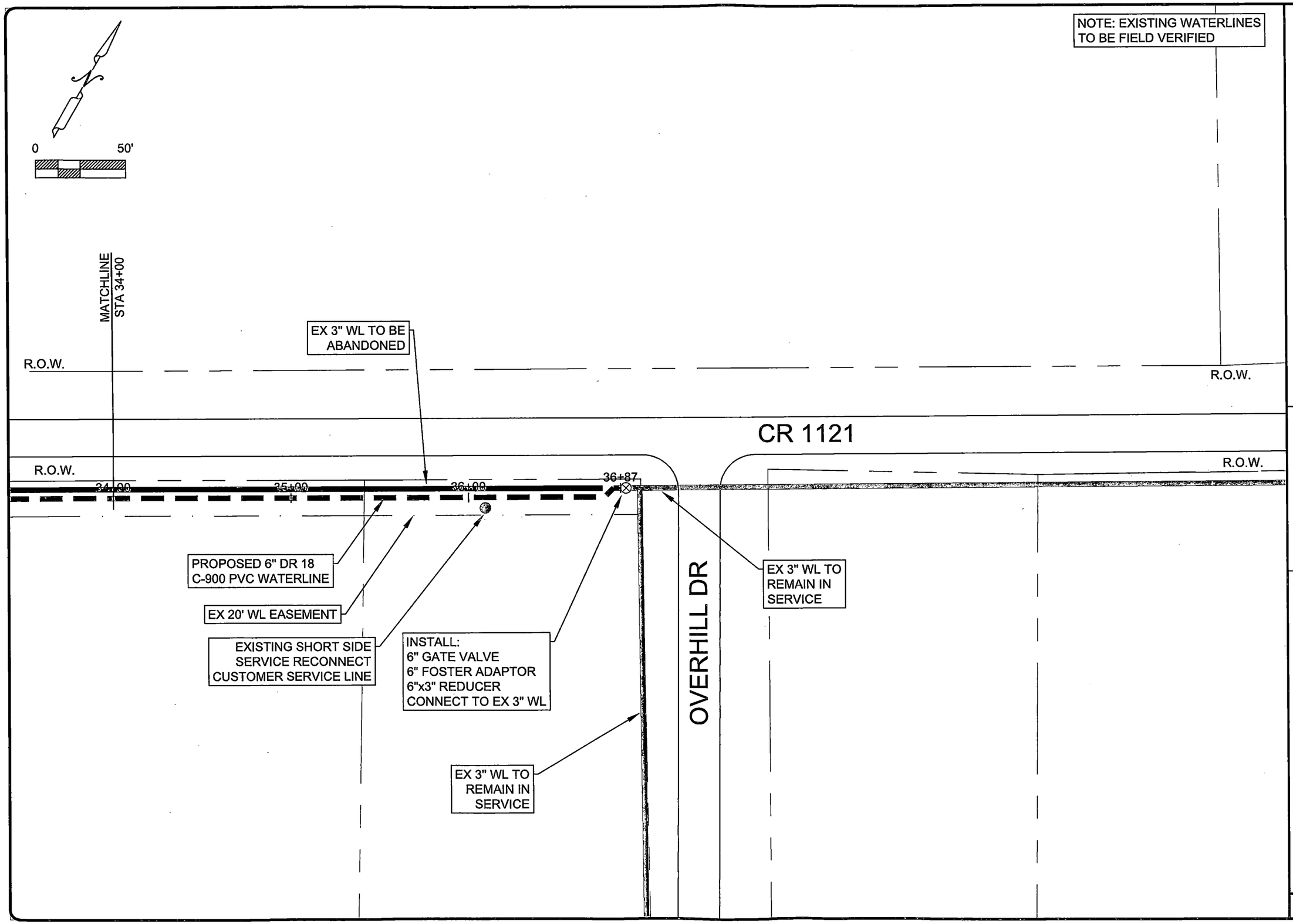

Daniel & Brown Inc.
118 McKinney St.
P.O. Box 606
Farmersville, Texas 75442
Phone 972-784-7777
WWW.DBIENGINEERS.COM

DBI ENGINEERS

FIRM REGISTRATION NO.: F-002225

DESIGNED: E.W.D. | DATE: 09/03/20
DRAWN: M.K.W. | REVISION: N/C
FILE: N:\Johnson Co SUD\WL-JCSUD TxCDBG-1018\AutoCAD\CR 1121 WL

STATE OF TEXAS
EDDY W. DANIEL
72181
REGISTERED PROFESSIONAL ENGINEER
10/23/2020

PROPOSED 6" WATERLINE ON CR 1121
FOR
JOHNSON COUNTY SUD
JOHNSON COUNTY, TEXAS

PLAN SHEET STA 34+00 - 36+87

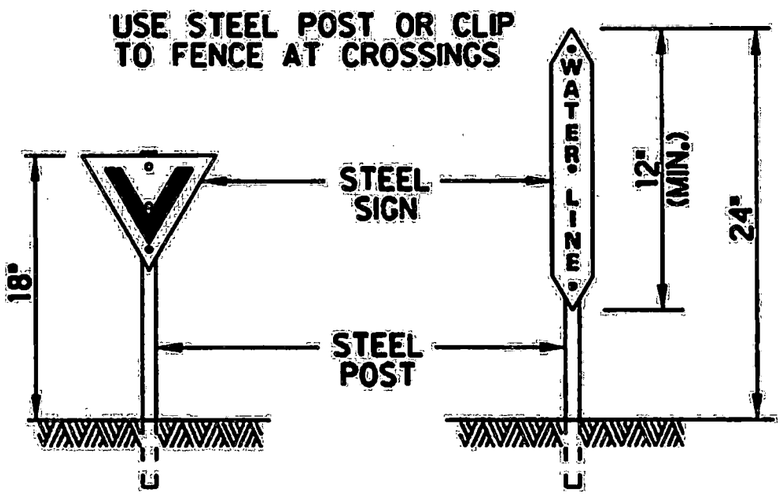

VALVE MARKER LINE MARKER

NOT TO SCALE

(FURNISH ONE VALVE MARKER PER VALVE, AND FURNISH TWO LINE MARKERS PER ROAD CROSSING, TYPICAL).

Daniel & Brown Inc.
118 McKinney St.
P.O. Box 606
Farmersville, Texas 75442
Phone 972-784-7777
WWW.DBIENGINEERS.COM

DBI ENGINEERS

FIRM REGISTRATION NO.: F-002225

DESIGNED: E.W.D. | DATE: 09/03/20
DRAWN: M.K.W. | REVISION: N/C
FILE: N:\Johnson Co SUD\WL-JCSUD TxCDBG-1018\AutoCAD\FM 4 WL

STATE OF TEXAS
EDDY W. DANIEL
72181
REGISTERED PROFESSIONAL ENGINEER
10/23/2020

PROPOSED WATERLINE IMPROVEMENTS
FOR
JOHNSON COUNTY SUD
JOHNSON COUNTY, TEXAS

STANDARD DETAILS

GAS PIPELINE OR STORM DRAINAGE CROSSING

NOT TO SCALE

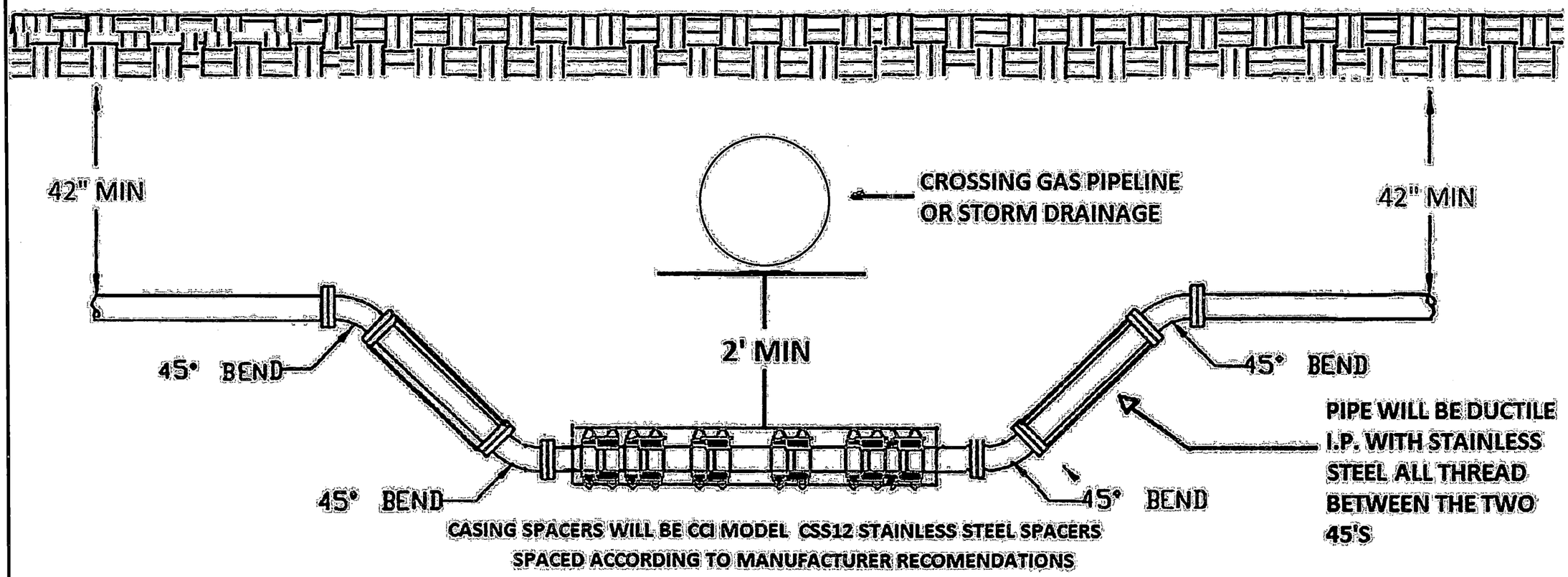

FITTINGS AND JOINTS SHALL BE EQUIPPED WITH JOINT RESTRAINTS. TABLE 2-06 IN THE SPECIFICATIONS WILL BE USED TO DETERMINE THE CASING DIAMETER. STAINLESS STEEL CCI MODEL CSS12 SPACERS WILL BE USED AND ESPANT END SEALS WILL BE INSTALLED PER SECTION 2-16 OF THE SPECIFICATIONS.

CASING PIPE WILL EITHER BE SDR 35 SEWER PIPE OR CARBON STEEL PIPE DEPENDING ON THE TYPE OF PIPE THE CROSSING UTILITY IS

Daniel & Brown Inc.
118 McKinney St.
P.O. Box 606
Farmersville, Texas 75442
Phone 972-784-1777
WWW.DBIENGINEERS.COM

DBI ENGINEERS

FIRM REGISTRATION NO.: F-002225

DATE: 09/03/20
REVISION: N/C
DESIGNED: E.W.D.
DRAWN: M.K.W.
FILE: N:\Johnson Co SUD\WL-JCSUD TxCDBG-1018\AutoCAD\FM 4 WL

STATE OF TEXAS
EDDY W. DANIEL
72181
REGISTERED PROFESSIONAL ENGINEER
10/23/2020

PROPOSED WATERLINE IMPROVEMENTS
FOR
JOHNSON COUNTY SUD
JOHNSON COUNTY, TEXAS

STANDARD DETAILS

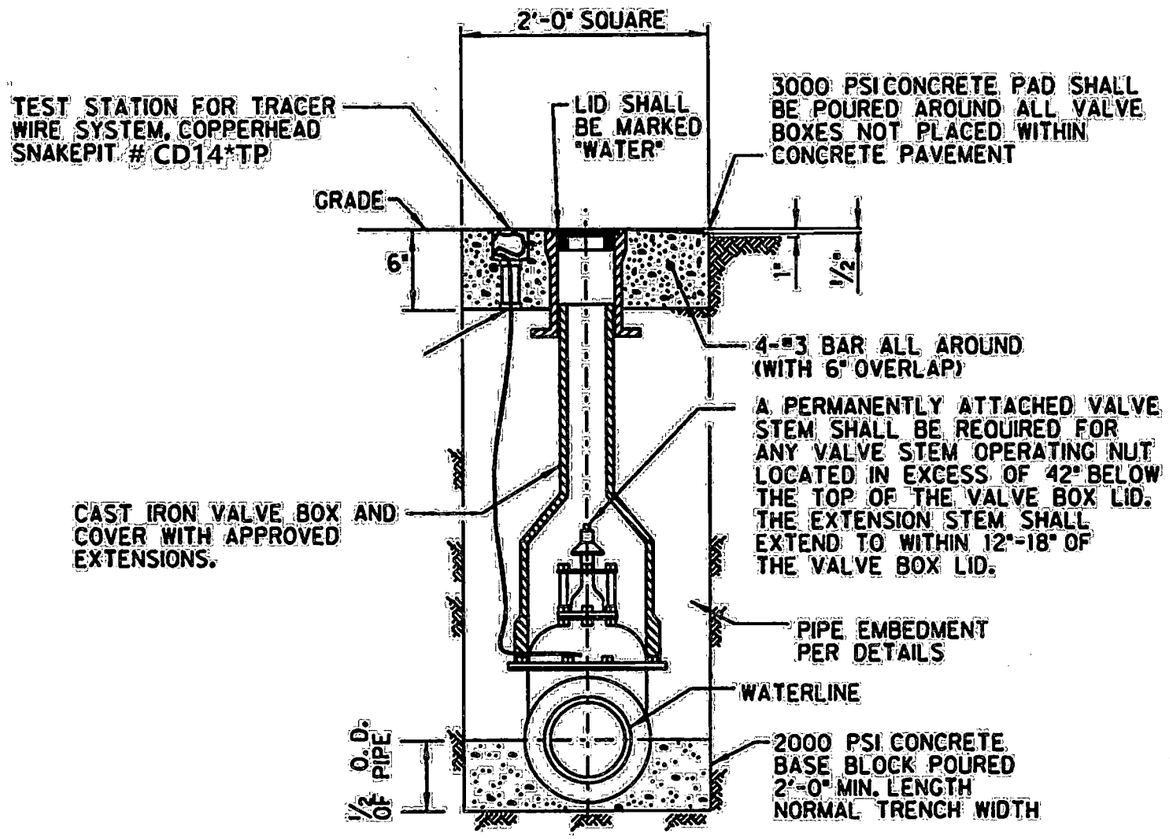

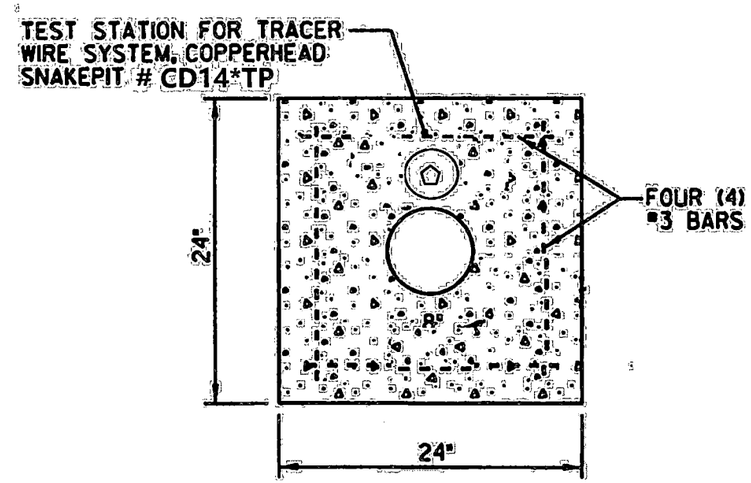

Gate Valve and Tracer Wire Detail

N.T.S.

Daniel & Brown Inc.
118 McKinney St.
P.O. Box 606
Farmersville, Texas 75442
Phone 972-784-7777
WWW.DBIENGINEERS.COM

DBI ENGINEERS

FIRM REGISTRATION NO.: F-002225

DESIGNED: E.W.D. | DATE: 09/03/20
DRAWN: M.K.W. | REVISION: N/C
FILE: N:\Johnson Co SUD\WL-JCSUD TxCDBG-1018\AutoCAD\FM 4 WL

STATE OF TEXAS
EDDY W. DANIEL
72181
REGISTERED PROFESSIONAL ENGINEER
10/23/2020

PROPOSED WATERLINE IMPROVEMENTS
FOR
JOHNSON COUNTY SUD
JOHNSON COUNTY, TEXAS

STANDARD DETAILS

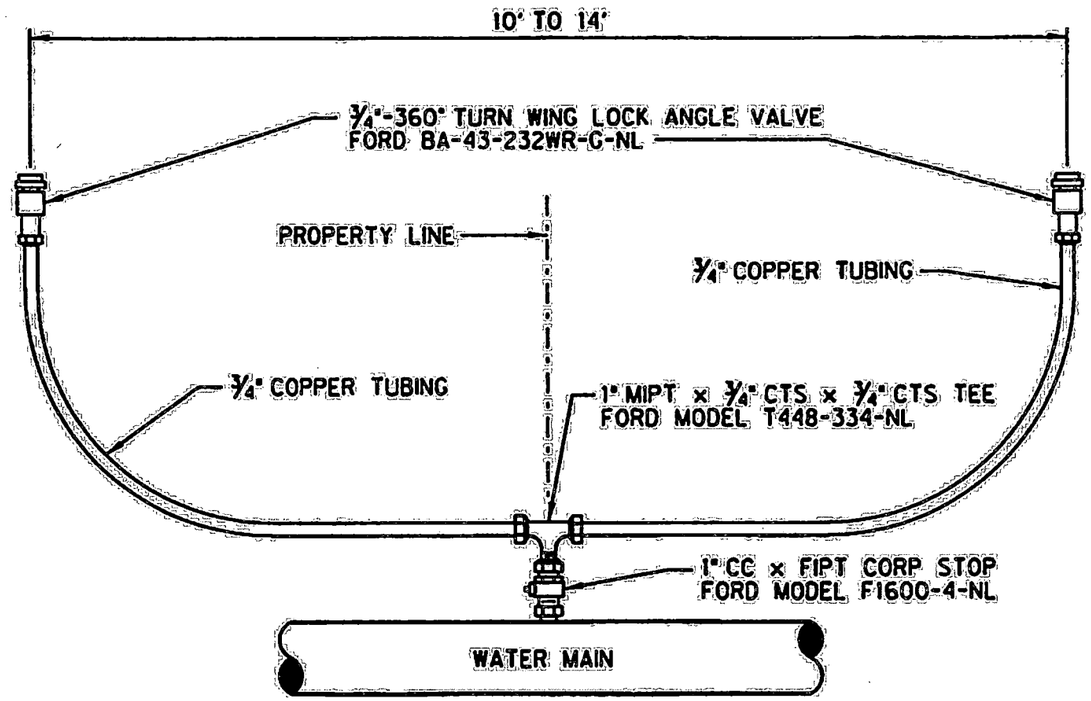

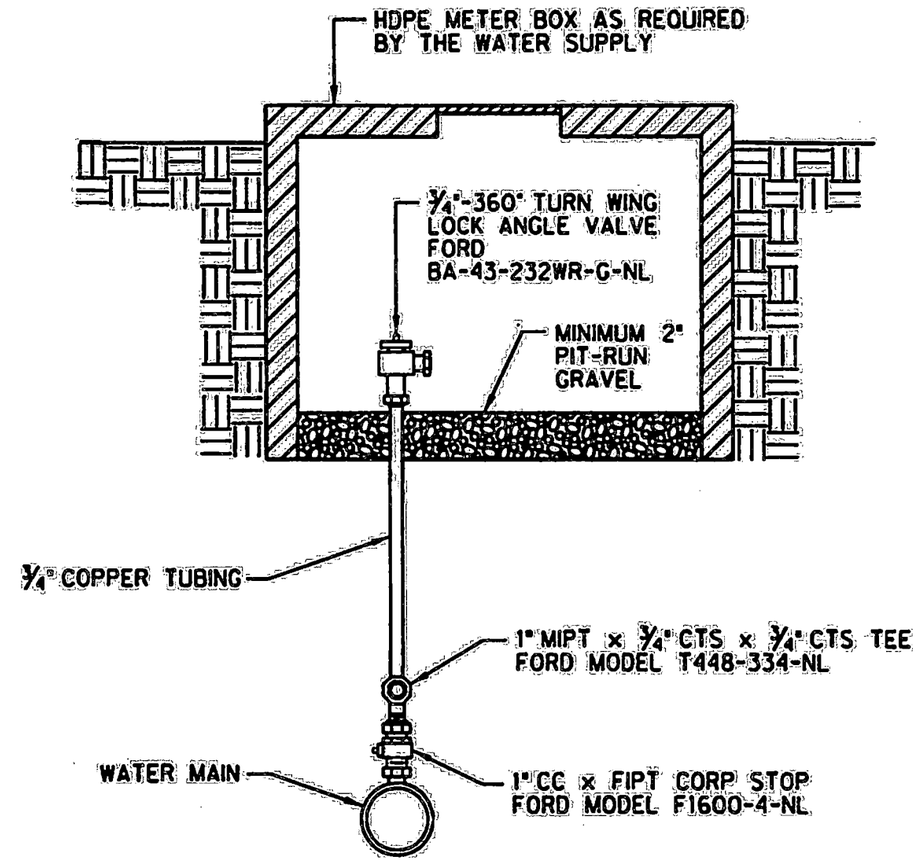

NOTE:
THE TAP SHALL BE AT 12 O'CLOCK.
THE TEE AND METERS SHOULD BE
ON TOP AND IN LINE WITH THE MAIN.

WATER METER SHORT SERVICE DETAIL (DUAL SERVICES)

N.T.S.

Daniel & Brown Inc.
118 McKinney St.
P.O. Box 606
Farmersville, Texas 75442
Phone 972-784-7777
WWW.DBIENGINEERS.COM
FIRM REGISTRATION NO.: F-002225

DBI ENGINEERS

DESIGNED: E.W.D. | DATE: 09/03/20
DRAWN: M.K.W. | REVISION: N/C
FILE: N:\Johnson Co.SUD\WL-JCSUD TxCDBG-1018\AutoCAD\FM 4 WL

STATE OF TEXAS
EDDY W. DANIEL
72181
REGISTERED PROFESSIONAL ENGINEER
10/23/2020

PROPOSED WATERLINE IMPROVEMENTS
FOR
JOHNSON COUNTY SUD
JOHNSON COUNTY, TEXAS

STANDARD DETAILS

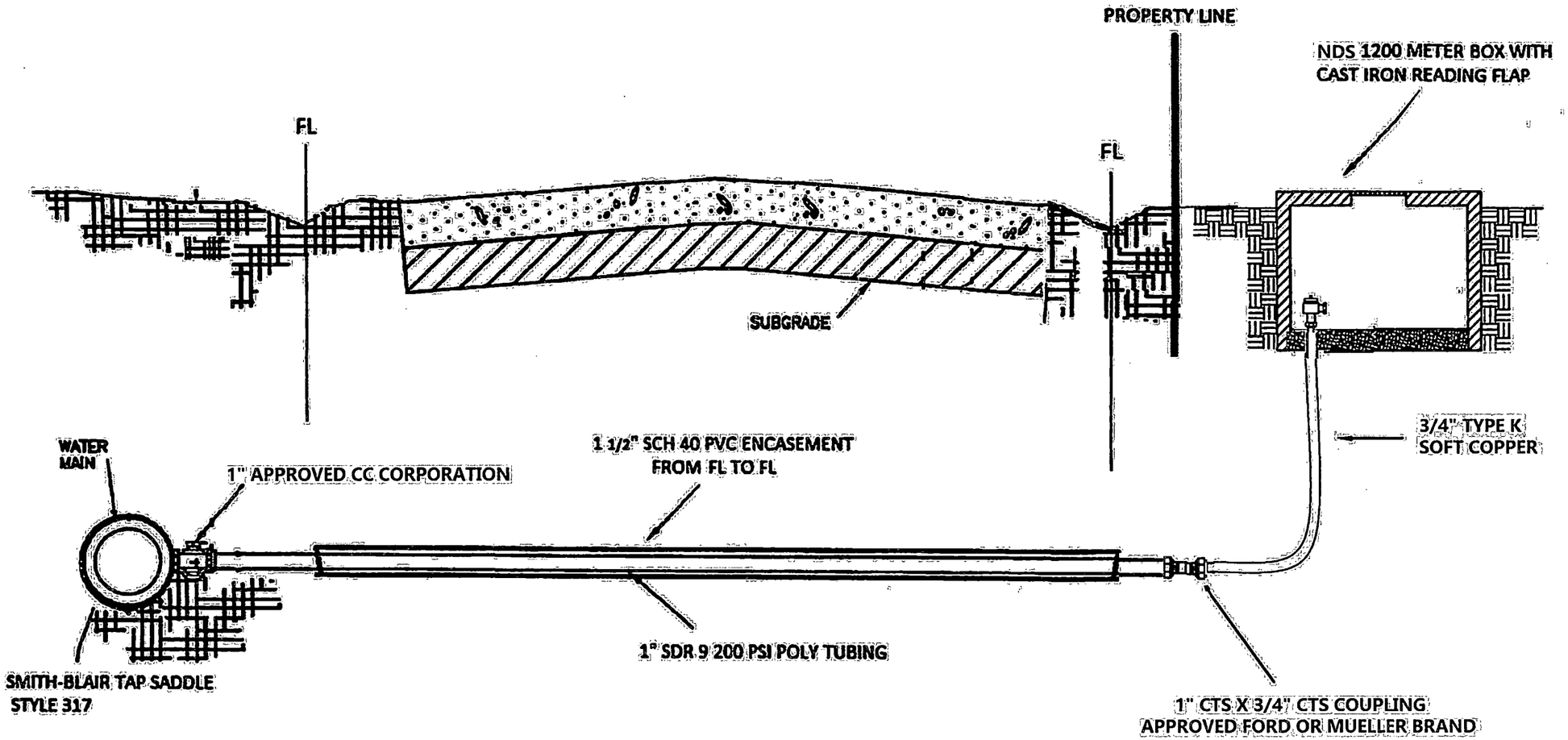

SINGLE SERVICE ROAD CROSSING COUNTY ROAD WITH BORROW DITCH

NOT TO SCALE

Daniel & Brown Inc.
118 McKinney St.
P.O. Box 606
Farmersville, Texas 75442
Phone 972-784-7777
WWW.DBIENGINEERS.COM

DBI ENGINEERS

FIRM REGISTRATION NO.: F-002225

DESIGNED: E.W.D. | DATE: 09/03/20
DRAWN: M.K.W. | REVISION: N/C
FILE: N:\Johnson Co SUD\WL-JCSUD TxCDBG-1018\AutoCAD\FM 4 WL

STATE OF TEXAS
EDDY W. DANIEL
72181
REGISTERED PROFESSIONAL ENGINEER
10/23/2020

PROPOSED WATERLINE IMPROVEMENTS
FOR
JOHNSON COUNTY SUD
JOHNSON COUNTY, TEXAS

STANDARD DETAILS

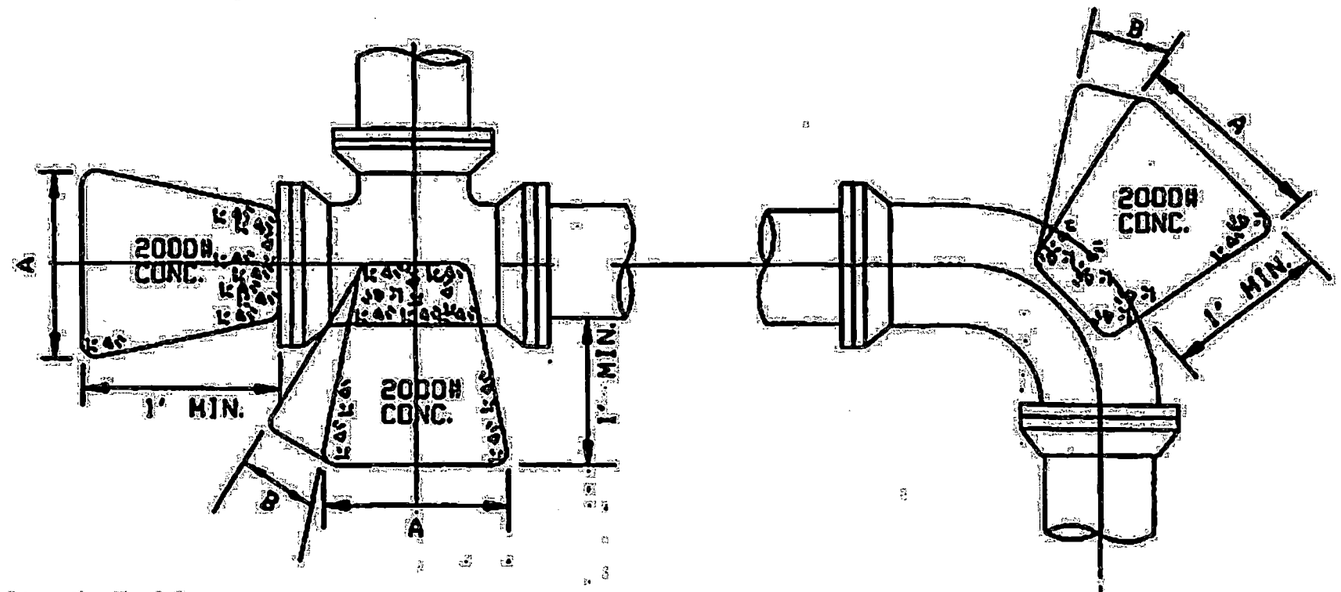

PIPE SIZE	TEES		90° BENDS		45° BENDS		11 1/4° BENDS		REDUCER	
	A	B	A	B	A	B	A	B	A	B
3"	18"	18"	18"	12"	18"	12"	18"	12"	12"	12"
4"	20"	14"	20"	14"	20"	14"	20"	14"	20"	12"
6"	24"	18"	24"	18"	24"	18"	24"	18"	20"	12"
8"	26"	20"	26"	20"	26"	20"	26"	20"	20"	14"
10"	36"	24"	36"	24"	36"	24"	36"	24"	24"	14"
12"	40"	28"	40"	28"	40"	28"	40"	28"	28"	16"

DIMENSIONS OF CONCRETE FOR THRUST BLOCKS AT FITTINGS

TYPICAL THRUST BLOCK DETAILS

NOT TO SCALE

Daniel & Brown Inc.
118 McKinney St.
P.O. Box 606
Farmersville, Texas 75442
Phone 972-784-7777
WWW.DBIENGINEERS.COM
FIRM REGISTRATION NO.: F-002225

DBI ENGINEERS

DESIGNED: E.W.D. | DATE: 09/03/20
DRAWN: M.K.W. | REVISION: N/C
FILE: N:\Johnson Co SUD\WL-JCSUD TxCDBG-1018\AutoCAD\FM 4 WL

STATE OF TEXAS
EDDY W. DANIEL
72181
REGISTERED PROFESSIONAL ENGINEER
10/23/2020

PROPOSED WATERLINE IMPROVEMENTS
FOR
JOHNSON COUNTY SUD
JOHNSON COUNTY, TEXAS

STANDARD DETAILS

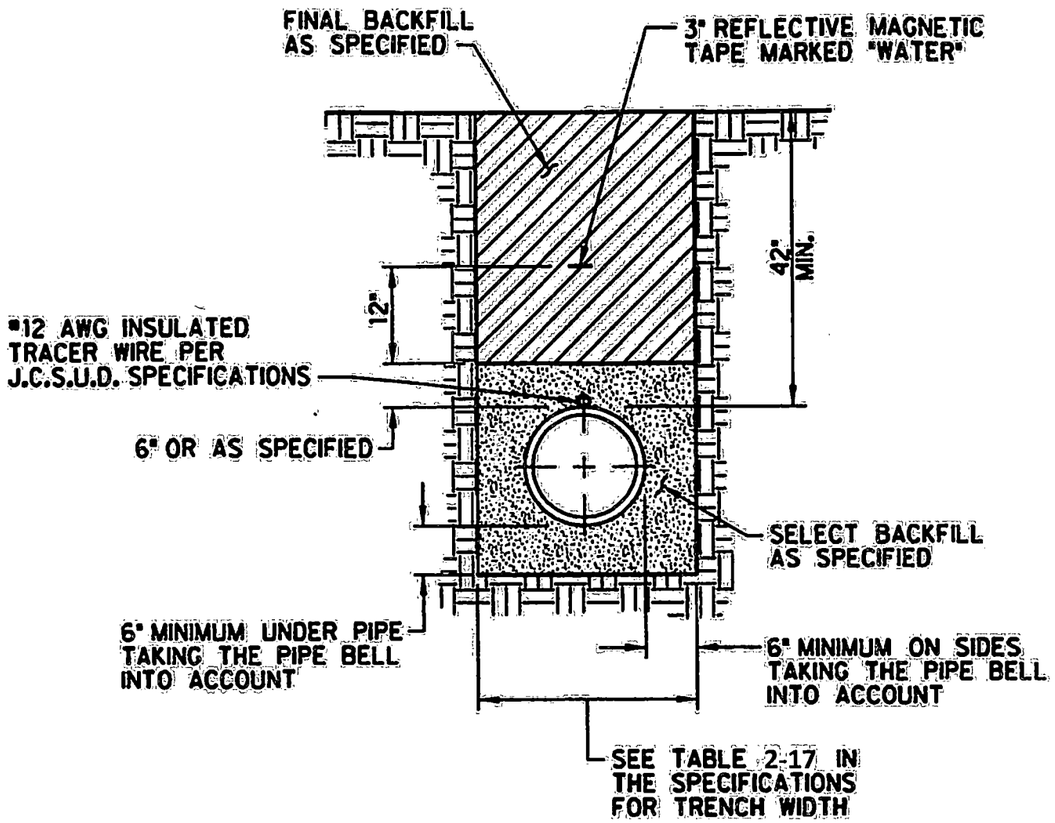

TRENCH AND BACKFILL DETAIL

N.T.S.

Daniel & Brown Inc.
118 McKinney St.
P.O. Box 606
Farmersville, Texas 75442
Phone 972-784-7777
WWW.DBIENGINEERS.COM

FIRM REGISTRATION NO.: F-002225

DBI ENGINEERS

DESIGNED: E.W.D. | DATE: 09/03/20
DRAWN: M.K.W. | REVISION: N/C
FILE: N:\Johnson Co SUD\WL-JCSUD TxCDBG-1018\AutoCAD\FM 4 WL

STATE OF TEXAS
EDDY W. DANIEL
72181
REGISTERED PROFESSIONAL ENGINEER
10/23/2020

PROPOSED WATERLINE IMPROVEMENTS FOR JOHNSON COUNTY SUD JOHNSON COUNTY, TEXAS

STANDARD DETAILS